Product data sheet

Specifications

Essential edge controller, Harmony BX1, ethernet, 2 serial, Linux, 24V DC

HMIBX1A0NDA

Main

Range of product	Harmony iPC
Device short name	essential edge controller
Product or component type	Essential edge controller
Operating system	Linux Debian 11
Processor name	ARM Cortex-A53 quad core at 1.6 GHz NXP i.MX8M Plus
Software package	EAE V 24.0 default
Memory type	4 GB RAM LPDDR4 internal
Data storage equipment	32 GB eMMC (soldered)

Complementary

Range compatibility	EcoStruxure Automation Expert
Range compatibility	EcoStruxure Automation Expert
Display resolution	1920 x 1080 pixels at 60 Hz
Integrated connection type	HDMI with 1 on front Ethernet with 2 1 RJ45, SMSC LAN7500 on front USB 3.0 type A with 2 on front TPM connector Ver 2.0, TPM module by default on motherboard
Cyber secured boot	Secure password boot
Control type	Resettable
Free slots	1 microSD
Audio/video interface	HDMI 1.4
Number of slots	2 slot(s) for mini PCIe
[Us] rated supply voltage	24 V DC
Electrical connection	Screw connector, connector type: pin, 1 way, circuit application: ground - location: bottom
Type of cooling	Fanless
Watchdog timer	3 min
Power consumption in W	9.36 W
Inrush current	6 A
Type of cooling	Fanless
Fixing mode	7.5 mm symmetrical DIN rail: on rail
Device mounting	DIN rail
Width	98.2 mm

Disclaimer: This documentation is not intended as a substitute for and is not to be used for determining suitability or reliability of these products for specific user applications

Depth	48 mm
Height	140.76 mm
Product weight	950 g

Environment

Pollution degree	<= 2 conforming to UL 61010
Product certifications	CE UKCA RCM CULus
IP degree of protection	IP20 DIN rail:
Ambient air temperature for operation	-20…70 °C
Ambient air temperature for storage	-40…80 °C
Pollution degree	<= 2
Vibration resistance	9.8 m/s²
Shock resistance	147 m/s²
Electromagnetic compatibility	EN/IEC 61131-2

Packing Units

Unit Type of Package 1	PCE
Number of Units in Package 1	1
Package 1 Height	11.6 cm
Package 1 Width	18.2 cm
Package 1 Length	26.6 cm
Package 1 Weight	1200 g
Unit Type of Package 2	S03
Number of Units in Package 2	4
Package 2 Height	30 cm
Package 2 Width	30 cm
Package 2 Length	40 cm
Package 2 Weight	5570 g

Environmental Data

Schneider Electric aims to achieve Net Zero status by 2050 through supply chain partnerships, lower impact materials, and circularity via our ongoing “Use Better, Use Longer, Use Again” campaign to extend product lifetimes and recyclability.

Environmental Data explained

How we assess product sustainability

Environmental footprint

Total lifecycle Carbon footprint	1022
Environmental Disclosure	Product Environmental Profile

Use Better

Materials and Substances

F-gas free	Only air and vacuum used for insulation / breaking, no F-gas including SF6
Packaging made with recycled cardboard	Yes
Packaging without single use plastic	No
EU RoHS Directive	Pro-active compliance (Product out of EU RoHS legal scope)
REACh Regulation	REACh Declaration
California proposition 65	WARNING: This product can expose you to chemicals including: Lead and lead compounds, which is known to the State of California to cause cancer and birth defects or other reproductive harm. For more information go to www.P65Warnings.ca.gov
Halogen-free status	Product contains halogen above thresholds
PVC free	No
Silicone-free	No

Use Again

Repack and remanufacture

End of life manual availability	End of Life Information
Removable battery	User replaceable
Take-back	No
WEEE Label	The product must be disposed on European Union markets following specific waste collection and never end up in rubbish bins

Dimensions Drawings

Dimensions

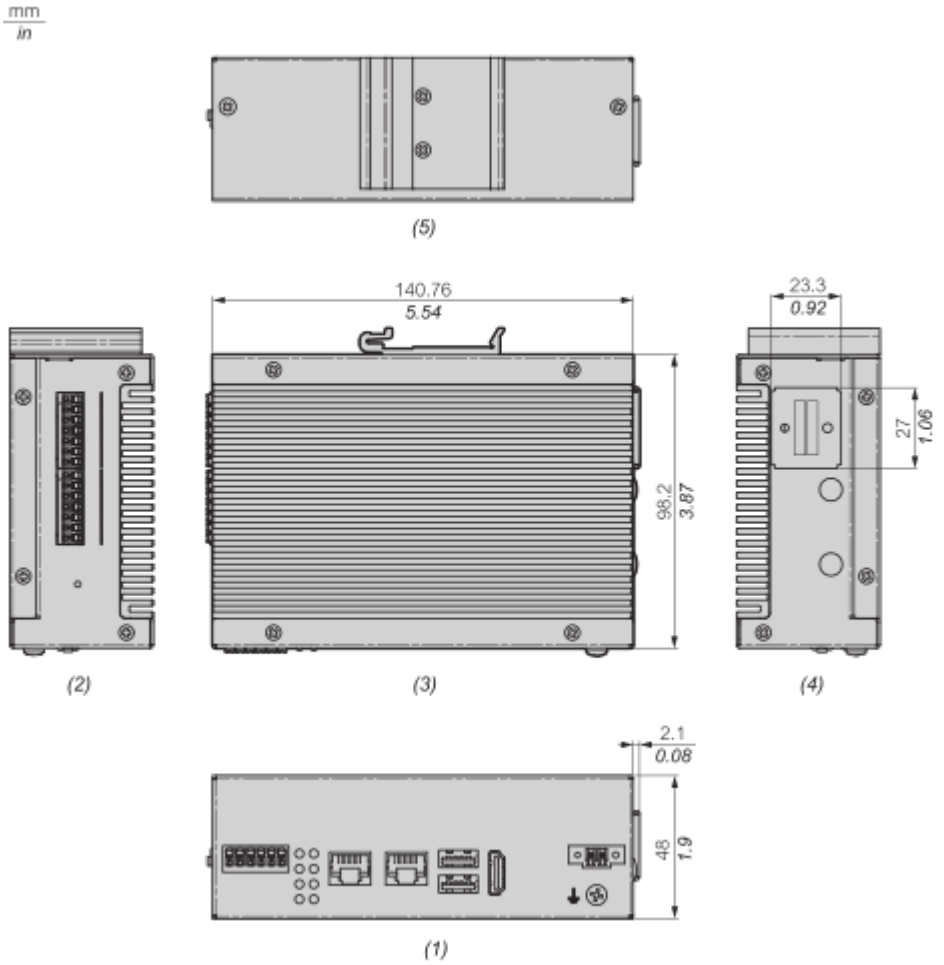

(1) : Front View
(2) : Left View
(3) : Top View
(4) : Right View
(5) : Rear View

Image of product / Alternate images

Alternative

Port 2
GND
--
--
--
--
D+2
D-2
GND
--
--
--
--
D+1
D-1
Port 1
GND
--
--
RX-2
RX+2
TX+2
TX-2
GND
--
--
RX-1
RX+1
TX+1
TX-1
GND
CTS2
RTS2
--
TXD2
RXD2
--
GND
CTS1
RTS1
--
TXD1
RXD1
--
Reset

Schneider
Harmony BX1
HMIBX1A0NDA
Rating:12-24VDC 24W

Schneider Electric
CAN 2
GND
CAN 1
GND
OS
PWR
LAN 2
LAN 1
USB3.0
HDMI
DC IN 12V~24V