NHA1112105

# Input EMC Filters — VW3A4701 ... 12
# Metal kit IP21 — VW3A47901 ... 908

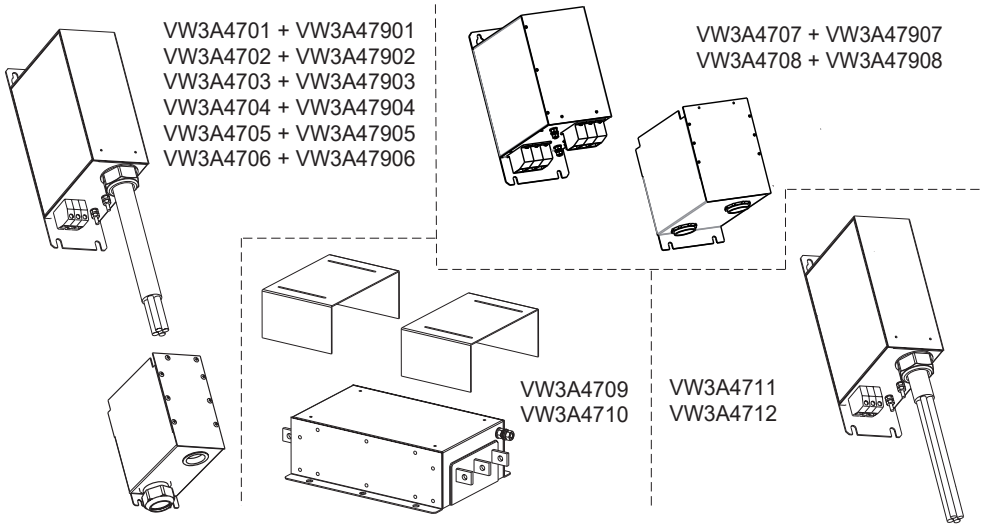


## ⚠ ⚠ DANGER

**HAZARD OF ELECTRIC SHOCK, EXPLOSION, OR ARC FLASH**

- Only appropriately trained persons who are familiar with and fully understand the contents of the present manual and all other pertinent product documentation and who have received all necessary training to recognize and avoid hazards involved are authorized to work on and with this equipment.
- Installation, adjustment, repair, and maintenance must be performed by qualified personnel.
- Verify compliance with all local and national electrical code requirements as well as all other applicable regulations with respect to grounding of all equipment.
- Before performing work and/or applying voltage on the equipment, follow the instructions given in the appropriate installation manual.

**Failure to follow these instructions will result in death or serious injury.**

## ⚠ CAUTION

**SHARP EDGES**

Use all necessary personal protective equipment (PPE) such as gloves when performing any type of work whatsoever on or with this product.

**Failure to follow these instructions can result in injury or equipment damage.**

Electrical equipment should be installed, operated, serviced, and maintained only by qualifed personnel. No responsibility is assumed by Schneider Electric for any consequences arising out of the use of this product.

© 2022 Schneider Electric. All Rights Reserved.

| INPUT EMC FILTERS | | METAL KIT IP21 |
|---|---|---|
| **VW3A4701** | 8A | **VW3A47901** |
| **VW3A4702** | 15A | **VW3A47902** |
| **VW3A4703** | 35A | **VW3A47903** |
| **VW3A4704** | 50A | **VW3A47904** |
| **VW3A4705** | 70A | **VW3A47905** |
| **VW3A4706** | 100A | **VW3A47906** |
| **VW3A4707** | 160A | **VW3A47907** |
| **VW3A4708** | 200A | **VW3A47908** |
| **VW3A4709** | 240A | **-** |
| **VW3A4710** | 320A | **-** |
| **VW3A4711** | 50A | **-** |
| **VW3A4712** | 70A | **-** |

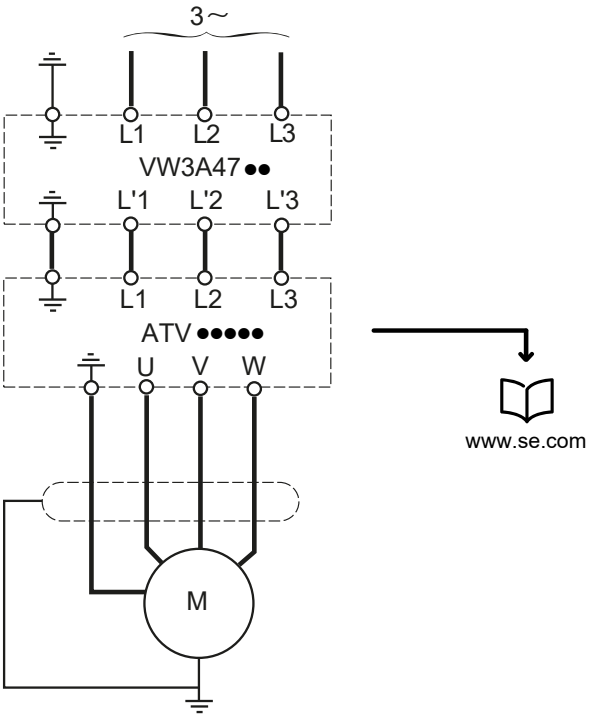

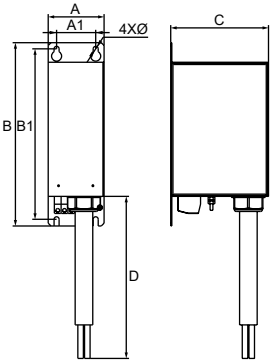


VW3A4701 ... 06

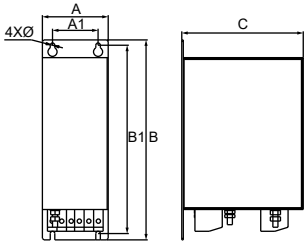


VW3A4707
VW3A4708

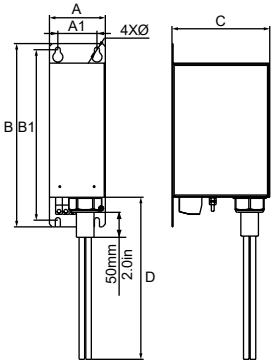


VW3A4711 ... 12

| INPUT EMC FILTERS | A | | B | | C | | D | | A1 | | B1 | | Ø | |
|---|---|---|---|---|---|---|---|---|---|---|---|---|---|---|
| | mm | in | mm | in | mm | in | mm | in | mm | in | mm | in | mm | in |
| **VW3A4701** | 75 | 3.0 | 220 | 8.7 | 130 | 5.1 | 500 | 19.7 | 45 | 1.8 | 200 | 7.9 | 7 | 0.28 |
| **VW3A4702** | 75 | 3.0 | 240 | 9.4 | 140 | 5.5 | 500 | 19.7 | 45 | 1.8 | 220 | 8.7 | 7 | 0.28 |
| **VW3A4703** | 80 | 3.2 | 302 | 11.9 | 155 | 6.1 | 750 | 29.5 | 50 | 2.0 | 282 | 11.1 | 7 | 0.28 |
| **VW3A4704** | 90 | 3.5 | 283 | 11.1 | 165 | 6.5 | 950 | 37.4 | 70 | 2.8 | 268 | 10.6 | 5.5 | 0.22 |
| **VW3A4705** | 100 | 3.9 | 328 | 12.9 | 175 | 6.9 | 1000 | 39.4 | 70 | 2.8 | 305 | 12 | 9 | 0.35 |
| **VW3A4706** | 120 | 4.7 | 340 | 13.4 | 180 | 7.1 | 1300 | 51.2 | 80 | 3.1 | 322 | 12.7 | 7 | 0.28 |
| **VW3A4707** | 130 | 5.1 | 395 | 15.6 | 240 | 9.4 | - | - | 90 | 3.5 | 372 | 14.6 | 9 | 0.35 |
| **VW3A4708** | 200 | 7.9 | 445 | 17.5 | 320 | 12.6 | - | - | 140 | 5.5 | 415 | 16.3 | 11 | 0.43 |
| **VW3A4711** | 90 | 3.5 | 283 | 11.1 | 165 | 6.5 | 950 | 37.4 | 70 | 2.8 | 268 | 10.6 | 5.5 | 0.22 |
| **VW3A4712** | 100 | 3.9 | 328 | 12.9 | 175 | 6.9 | 1000 | 39.4 | 70 | 2.8 | 305 | 12 | 9 | 0.35 |

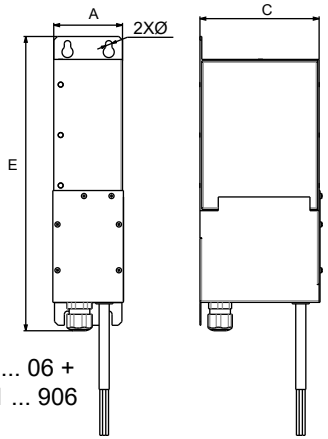


VW3A4701 ... 06 +
VW3A47901 ... 906

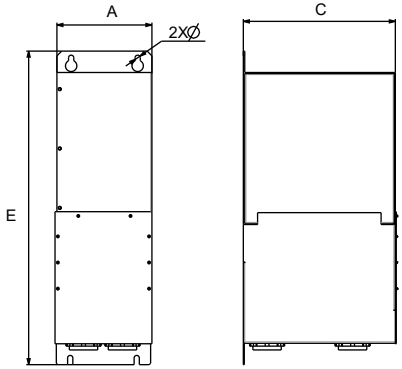


VW3A4707 + VW3A47907
VW3A4708 + VW3A47908

| INPUT EMC FILTERS | A | | C | | E | | Ø | |
|---|---|---|---|---|---|---|---|---|
| | mm | in | mm | in | mm | in | mm | in |
| **VW3A4701 + VW3A47901** | 77 | 3 | 132 | 5.2 | 321 | 12.6 | 7 | 0.28 |
| **VW3A4702 + VW3A47902** | 77 | 3 | 142 | 5.6 | 341 | 13.4 | 7 | 0.28 |
| **VW3A4703 + VW3A47903** | 83 | 3.3 | 157 | 6.2 | 397 | 15.6 | 7 | 0.28 |
| **VW3A4704 + VW3A47904** | 93 | 3.7 | 167 | 6.6 | 428 | 16.9 | 5.5 | 0.22 |
| **VW3A4705 + VW3A47905** | 103 | 4.0 | 177 | 7 | 470 | 18.5 | 9 | 0.35 |
| **VW3A4706 + VW3A47906** | 123 | 4.8 | 182 | 7.2 | 515 | 20.3 | 7 | 0.28 |
| **VW3A4707 + VW3A47907** | 134 | 5.3 | 242 | 9.5 | 615 | 24.2 | 9 | 0.35 |
| **VW3A4708 + VW3A47908** | 204 | 8 | 322 | 12.7 | 660 | 26.0 | 11 | 0.43 |

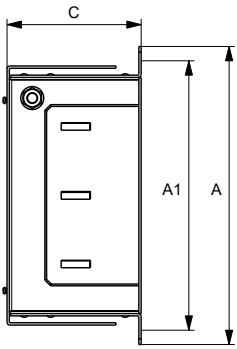


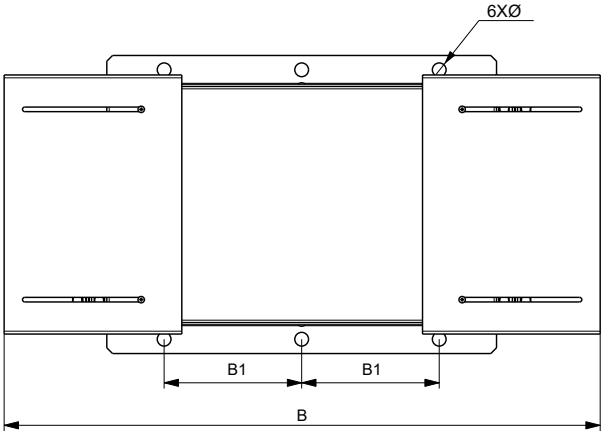


| INPUT EMC FILTERS | A | | B | | C | | A1 | | B1 | | Ø | |
|---|---|---|---|---|---|---|---|---|---|---|---|---|
| | mm | in | mm | in | mm | in | mm | in | mm | in | mm | in |
| **VW3A4709** | 260 | 10.2 | 520 | 20.4 | 117 | 4.6 | 235 | 9.3 | 120 | 4.7 | 12 | 0.47 |
| **VW3A4710** | 260 | 10.2 | 520 | 20.4 | 117 | 4.6 | 235 | 9.3 | 120 | 4.7 | 12 | 0.47 |

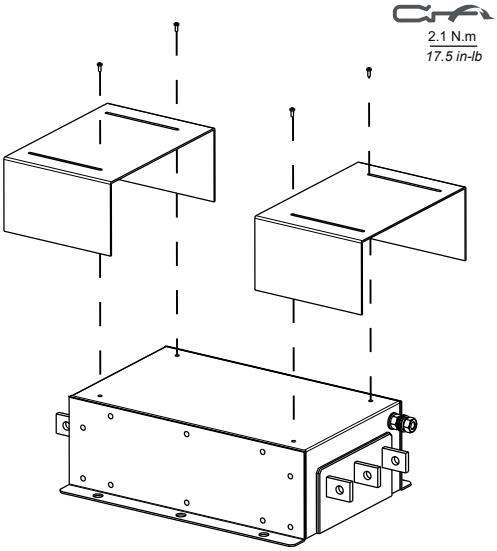


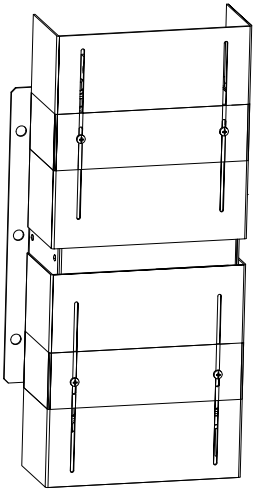

**VW3A4709**
**VW3A4710**

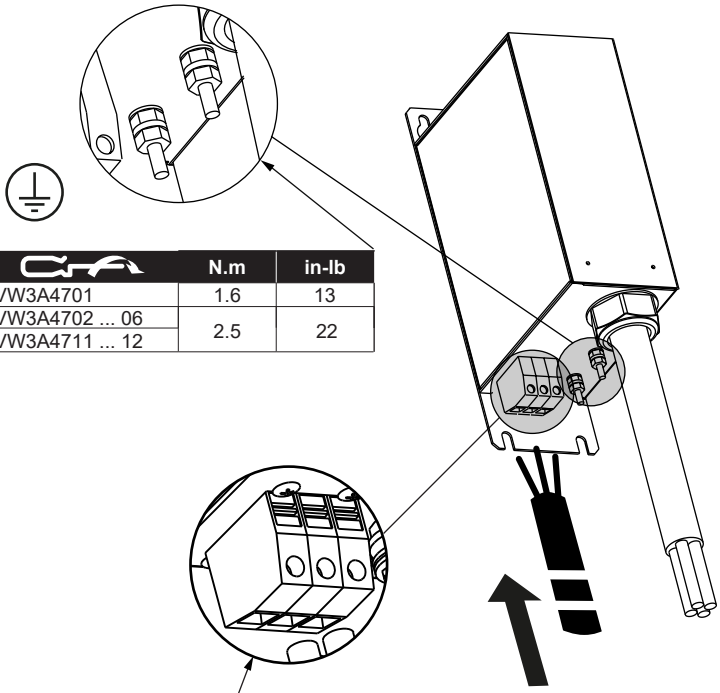

| | N.m | in-lb |
|---|---|---|
| VW3A4701 | 1.6 | 13 |
| VW3A4702 ... 06<br>VW3A4711 ... 12 | 2.5 | 22 |

| | N.m | in-lb |
|---|---|---|
| VW3A4701 ... 02 | 1.3 | 11.5 |
| VW3A4703 ... 05<br>VW3A4711 ... 12 | 2.6 | 23 |
| VW3A4706 | 4.4 | 38.9 |

**1**

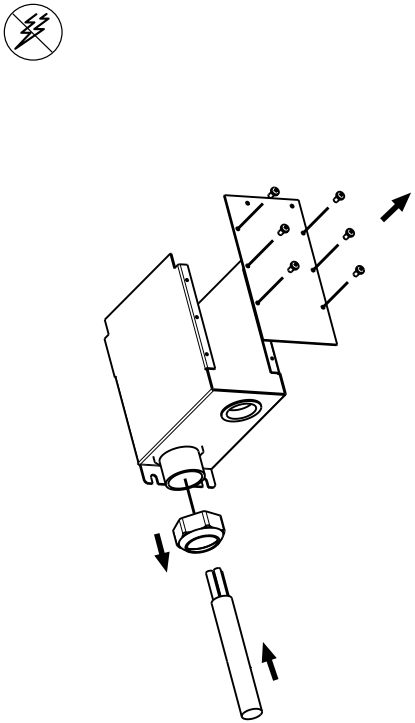

**2**

| | N.m | in-lb |
|---|---|---|
| VW3A4701 ... 02 | 1.3 | 11.5 |
| VW3A4703 ... 05 | 2.6 | 23 |
| VW3A4706 | 4.4 | 38.9 |

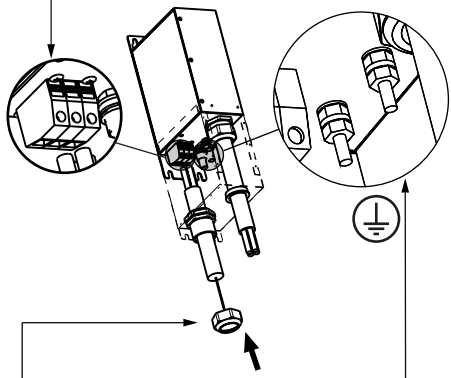

| | N.m | in-lb |
|---|---|---|
| VW3A4701 | 1.6 | 13 |
| VW3A4702 ... 06 | 2.5 | 22 |

| | N.m | in-lb |
|---|---|---|
| VW3A4701 ... 02 | 3.3 | 27.6 |
| VW3A4703 ... 06 | 5 | 41.5 |

**3**

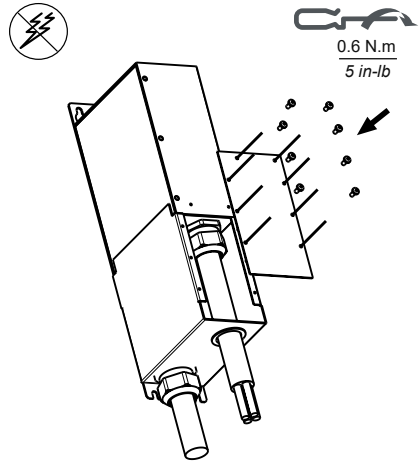


**4**

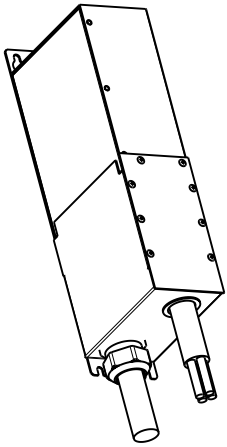

**1**

| | N.m | in-lb |
|---|---|---|
| VW3A47907 | 4.4 | 38.9 |
| VW3A47908 | 6.2 | 54.9 |

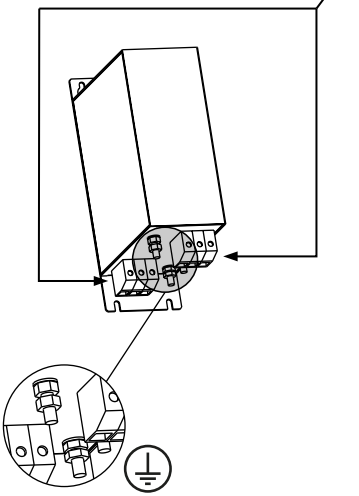

| | N.m | in-lb |
|---|---|---|
| VW3A4707 | 8 | 70.8 |
| VW3A4708 | | |

**2** VW3A47907, VW3A47908

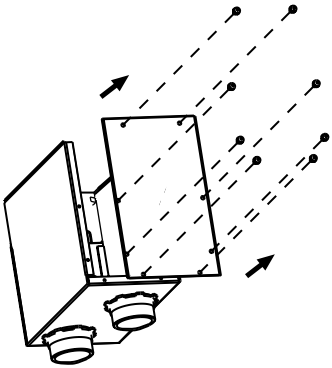

**3**

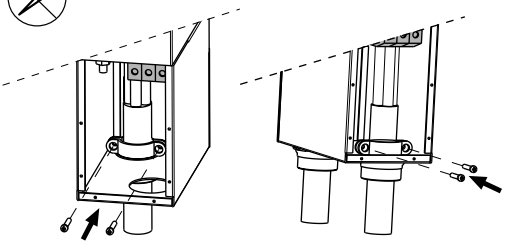

1.2 N.m
*10.6 in-lb*

**4**

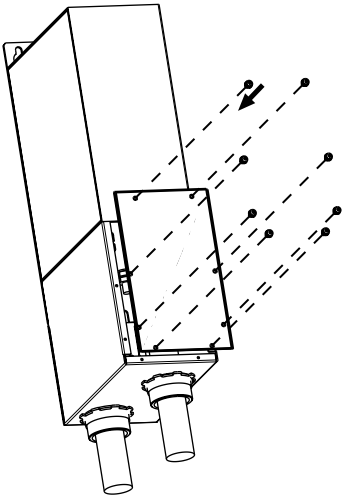

0.6 N.m
*5 in-lb*

**5**

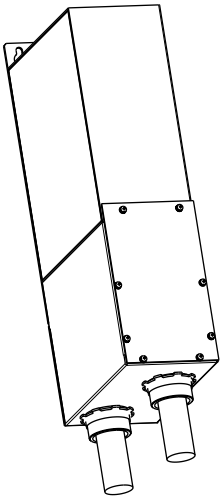

| | N.m | in-lb |
|---|---|---|
| VW3A4709, VW3A4710 | 10 | 88.5 |

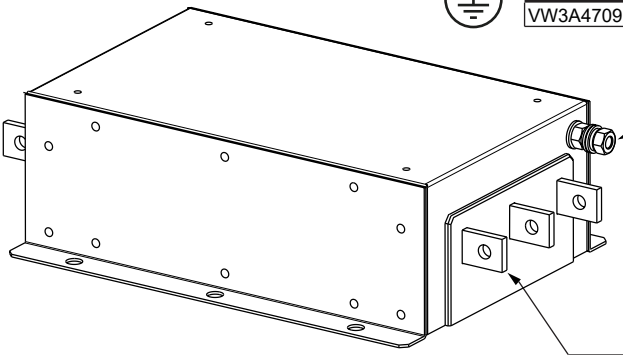
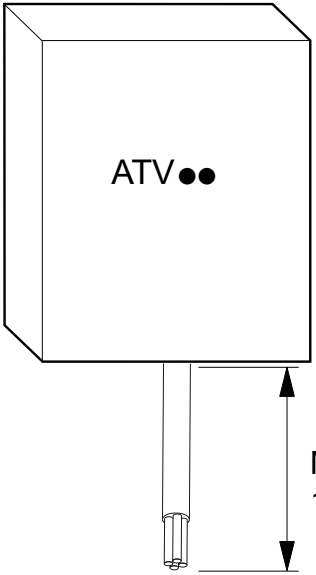
| | N.m | in-lb |
|---|---|---|
| VW3A4709, VW3A4710 | 27 | 224 |