Product data sheet

Specifications

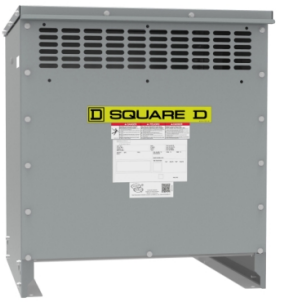

Transformer, dry type, DOE 2016, 30kVA, 3 phase, 480V delta primary, 240V delta secondary, 18M, 150C rise

EXN30T6H

Product availability: Non-Stock - Not normally stocked in distribution facility

Main

Range of Product	Square D
Product or Component Type	Transformer
Device short name	DOE 2016
Transformer type	Energy efficient
Device Application	Low voltage electrical distribution

Complementary

Box number	18M
Phase	3 phase
Rated operational power in VA	30 kVA
Network Frequency	60 Hz
type of cooling	Natural convection
Primary Voltage	480 V delta
Number of tap-offs	2 2.5 % FCAN 4 2.5 % FCBN
Primary operational current	36.08 A 72.17 A 30 kVA
Secondary voltage	240 V delta
Coil Material	Aluminium
Basic IMP level (BIL)	10 kV
Temperature Rise	150 °C 220 °C insulated
DOE Efficiency	98.31 % at 35 % load factor , 167 °F (75.0 °C)
Sound Level	6 dB NEMA ST-20 39 dB
%IZ	2.99 %
%IX	1.90 %
X/R Ratio	1.00
Inrush current	547 A
Let Through Current	2.41 kA
Transformer Losses	110 no load (core loss) 703 load loss (coil loss)

Price is “List Price” and may be subject to a trade discount – check with your local distributor or retailer for actual price.

Disclaimer: This documentation is not intended as a substitute for and is not to be used for determining suitability or reliability of these products for specific user applications

Transformer BTU/HR	442 16.6 % 525 25 % 975 50 % 1725 75 % 2774 100 %
Height	28.3 in (719 mm)
Depth	24.7 in (627 mm)
Width	25.5 in (648 mm)
Net Weight	361.007 lb(US) (163.75 kg)
Mounting support	Floor Floor, with 7400FMB Ceiling, with 7400CMB18M19M20M Wall, with 7400WMB18M19M20M
Degree of protection	UL type 2 UL type 3R, with 7400WS18M19M20M
Electrical connection	2 Hole Nema Pad secondary 0.4 in (11.1 mm) 2 Hole Nema Pad primary 0.4 in (11.1 mm)
Number of mounting holes	4 Ø: 0.5 in (13 mm)

Environment

Ambient air temperature for operation	104 °F (40 °C)
Average ambient air temperature for operation	30 °C
Standards	UL 1561 CSA C22.2 No 47 NEMA ST-20

Ordering and shipping details

Category	US1PE2X16256
Discount Schedule	PE2X
Returnability	Yes
Country of origin	MX

Packing Units

Unit Type of Package 1	PCE
Nbr. of units in pkg.	1
Package 1 Height	28.31 in (71.9 cm)
Package 1 Width	25.51 in (64.8 cm)
Package 1 Length	24.69 in (62.7 cm)
Package weight(Lbs)	395.0004 lb(US) (179.169 kg)

Environmental Data

Schneider Electric aims to achieve Net Zero status by 2050 through supply chain partnerships, lower impact materials, and circularity via our ongoing “Use Better, Use Longer, Use Again” campaign to extend product lifetimes and recyclability.

Environmental Data explained

How we assess product sustainability

Environmental footprint

Environmental Disclosure	Product Environmental Profile

Use Better

Materials and Substances

Packaging made with recycled cardboard	**Yes**
Packaging without single use plastic	**Yes**

Use Again

Repack and remanufacture

Circularity Profile	**No need of specific recycling operations**
Take-back	**No**

Technical Illustration

Dimensions

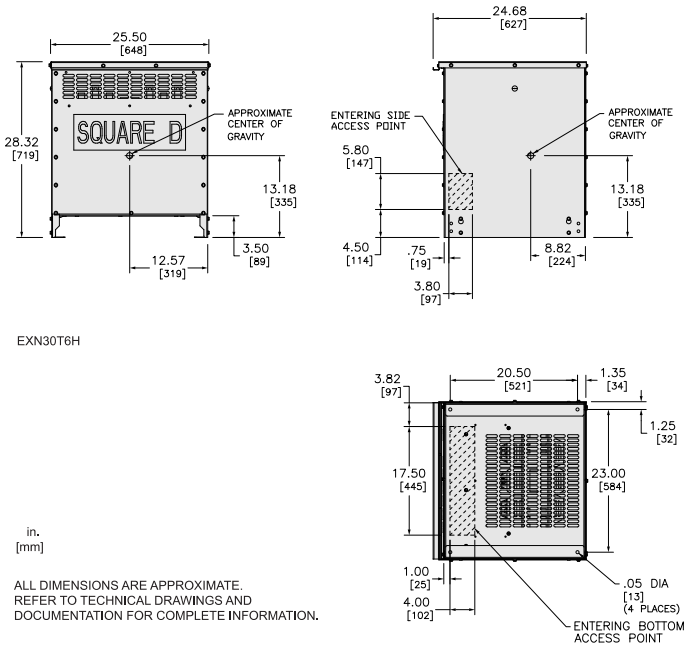

EXN30T6H

in.
[mm]

ALL DIMENSIONS ARE APPROXIMATE.
REFER TO TECHNICAL DRAWINGS AND DOCUMENTATION FOR COMPLETE INFORMATION.