QO™ Load Center
Surge Protective Devices (SPDs)

QO2175SB and QO250PSPD

10kA I_n Meets NEC 2023 Code

Square D™ QO™ load center products feature compact and affordable surge protective devices (SPDs). The nominal discharge current (I_n) ratings for these units meet or exceed the latest requirements set forth by the National Electrical Code (NEC®). They are quick plug-on devices that take only two adjacent mounting spaces and directly connect to the equipment bus, allowing the SPD to deliver superior surge suppression performance.

Features

QO2175SB Surgebreaker™
- 25kA Surge Current Rating
- 10kA Nominal Discharge Current (I_n)
- Wired Neutral Pigtail
- 3 Year Warranty
- $10,000 Connected Equipment

QO250PSPD PoN SPD
- 50kA Surge Current Rating
- 20kA Nominal Discharge Current (I_n)
- Plug-on Neutral (PoN) Quick Connection
- 5 Year Warranty
- $50,000 Connected Equipment

QO2175SB

QO250PSPD

www.se.com

Life Is On | Schneider Electric

Specifications

QO™ Load Center SPDs		
Performance	**QO2175SB**	**QO250PSPD[1]**
Voltage	120/240V 1Ø, 3-wire	
Surge Current Rating per Phase	25kA	50kA
Nominal Discharge Current (I_n)	10kA	20kA
Suppression Technology	Individually Fused MOVs	
Thermal & Overcurrent Protection	Yes	
Overcurrent Fusing	Yes	
Operating Frequency	50/60 Hz	
Warranty	3 Years	5 Years
Connected Equipment Coverage	$10,000	$50,000
Listings	cULus per UL 1449 5th ed., Type 1 CSA C22.2 No. 269.1, C233.1	
Mechanical Description	**QO2175SB**	**QO250PSPD[1]**
Enclosure	Non-metallic	
Bus Bar Connection Method	Plug-on	
Neutral Connection Method	Wired Neutral	Plug-on Neutral
Weight	0.31 lbs. (0.14 kg.)	0.38 lbs. (0.17 kg.)
Operating Altitude	Sea Level -12,000' (3,658 m)	
Storage/Operating Temperature	-4° F (-20° C) to 149° F (65° C)	
Operating Humidity	0 to 95% non-condensing	
Diagnostics		
Green LED Status Indicator	On = Ok, Off = Replace	

[1] For Use with Plug-on Neutral Equipment

For warranty and troubleshooting of existing devices, contact SPDTAG@se.com or 800-577-7353.

QO Load Center Plug-on Neutral SPDs

Rear View

Dimensions

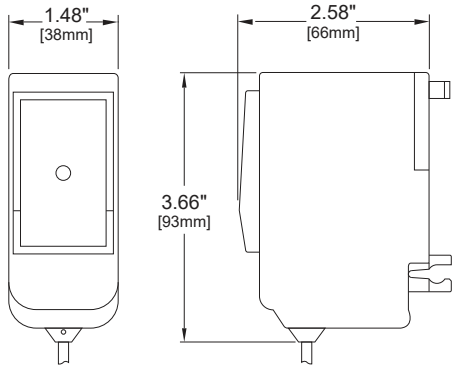

QO2175SB

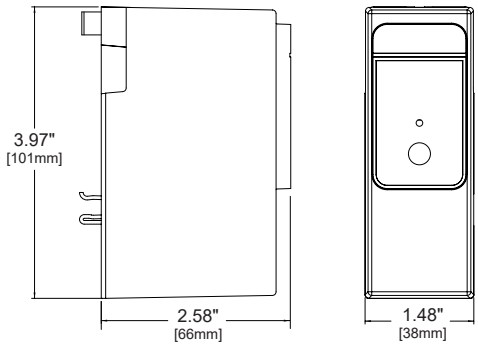

QO250PSPD

www.se.com

Life Is On | Schneider Electric

Schneider Electric
6700 Tower Cir #700
Franklin, TN 37067

© 2024 Schneider Electric. All Rights Reserved. Life Is On Schneider Electric is a trademark and the property of Schneider Electric SE, its subsidiaries and affiliated companies.

998-22895953 Rev- 02/2024

The information provided in this document contains general descriptions and/or technical characteristics of the performance of the described products or services. For detailed specification, performance, and instruction of use, refer to corresponding catalogs and user guides if available.

Schneider Electric reserves the right to make changes or updates with respect to or in the content of this document or the format thereof, at any time without notice.