# Product data sheet

Specifications

## Power relay, SE Relays, 15A, 3PDT, 24 VDC, cover with locking push button and LED

783XCXM4L-24D

**Product availability: Stock - Normally stocked in distribution facility**

## Main

| | |
|---|---|
| **Product Range** | Legacy |
| **Product Type** | Power relay |
| **Switch Function** | 3PDT |
| **Contact Composition** | 3 NO + 3 NC |

## Complementary

| | |
|---|---|
| **Input Current** | 15 A |
| **Contacts Material** | Silver alloy, gold flashed |
| **Local Signalling** | LED<br>Flag |
| **Control Type** | Lockable test button |
| **Minimum Switching Current** | 10 mA 17 V |
| **Coil Resistance** | 320 Ohm |
| **Input voltage** | 24 V DC |
| **Drop-out Voltage Threshold** | >= 0.15 Uc AC<br>>= 0.1 Uc DC |
| **Rated Operational Current** | 15 A at 120...277 V AC conforming to UL<br>15 A at 28 V DC conforming to UL<br>15 A at 120/150 V AC conforming to CSA<br>10 A at 151/277 V AC conforming to CSA<br>15 A at 28 V DC conforming to CSA<br>15 A at 250 V AC (NO) conforming to IEC<br>15 A at 28 V DC (NO) conforming to IEC<br>7.55 A at 250 V AC (NC) conforming to IEC<br>7.55 A at 28 V DC (NC) conforming to IEC |
| **Power consumption in W** | 1.85 W DC |
| **Power consumption in VA** | 2.05 VA AC |
| **Voltage Range** | 0.8...1.1 Un AC/DC |
| **Maximum Switching Voltage** | 300 V AC UL<br>300 V AC CSA<br>250 V AC IEC |
| **Motor Power HP** | 0.5 hp 120 V AC 50/60 Hz<br>1 hp 277 V AC 50/60 Hz |
| **Connections Terminals** | Faston terminals |
| **Mounting** | Socket |
| **Height** | 1.5 in (39.1 mm) |
| **Width** | 0.8 in (21 mm) |

Price is “List Price” and may be subject to a trade discount – check with your local distributor or retailer for actual price.

Disclaimer: This documentation is not intended as a substitute for and is not to be used for determining suitability or reliability of these products for specific user applications

| | |
|---|---|
| **Depth** | 1.07 in (27.3 mm) |
| **Product Weight** | 2.1 oz (60 g) |
| **Operating Time** | 20 ms operating<br>20 ms tripping |

## Environment

| | |
|---|---|
| **Ambient Air Temperature for Operation** | -40…131 °F (-40…55 °C) |
| **Ambient Air Temperature for Storage** | -40…185 °F (-40…85 °C) |
| **Product Certifications** | UL<br>CE<br>CSA |
| **Electrical Durability** | 100000 cycles resistive |
| **Mechanical Durability** | 10000000 cycles |
| **Dielectric Strength** | 2000 V AC between coil and contact<br>2000 V AC between poles<br>1500 V AC between contacts |
| **Shock Resistance** | 15 gn in operation |
| **Vibration Resistance** | +/- 1 mm 10…35 Hz)<br>3 gn 35…150 Hz) |

## Ordering and shipping details

| | |
|---|---|
| **Category** | US10CP221127 |
| **Discount Schedule** | 0CP2 |
| **GTIN** | 3606480281211 |
| **Returnability** | Yes |
| **Country of origin** | CN |

## Packing Units

| | |
|---|---|
| **Unit Type of Package 1** | PCE |
| **Number of Units in Package 1** | 1 |
| **Package 1 Height** | 1.10 in (2.794 cm) |
| **Package 1 Width** | 1.30 in (3.302 cm) |
| **Package 1 Length** | 1.90 in (4.826 cm) |
| **Package 1 Weight** | 1.920 oz (54.432 g) |

## Environmental Data

Schneider Electric aims to achieve Net Zero status by 2050 through supply chain partnerships, lower impact materials, and circularity via our ongoing “Use Better, Use Longer, Use Again” campaign to extend product lifetimes and recyclability.

Environmental Data explained >

How we assess product sustainability >

### Environmental footprint

| | |
|---|---|
| Environmental Disclosure | Product Environmental Profile |

## Use Better

### Materials and Substances

| | |
|---|---|
| Packaging without single use plastic | Yes |
| EU RoHS Directive | Pro-active compliance (Product out of EU RoHS legal scope) |
| REACh Regulation | REACh Declaration |
| California proposition 65 | WARNING: This product can expose you to chemicals including: Nickel compounds, which is known to the State of California to cause cancer, and Di-isodecyl phthalate (DIDP), which is known to the State of California to cause birth defects or other reproductive harm. For more information go to www.P65Warnings.ca.gov |

## Use Again

### Repack and remanufacture

| | |
|---|---|
| Circularity Profile | End of Life Information |
| Take-back | No |
| WEEE | The product must be disposed on European Union markets following specific waste collection and never end up in rubbish bins. |

Dimensions Drawings

**Approximate Dimensions**

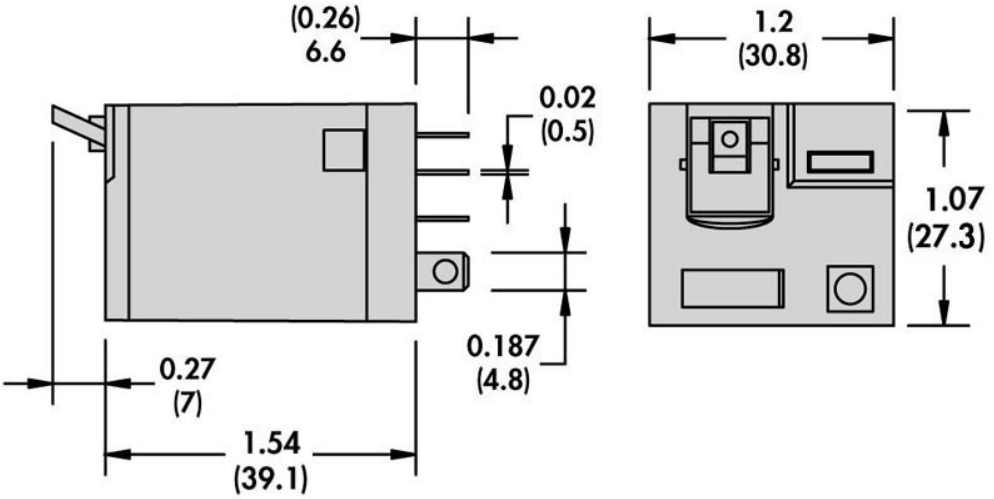

Connections and Schema
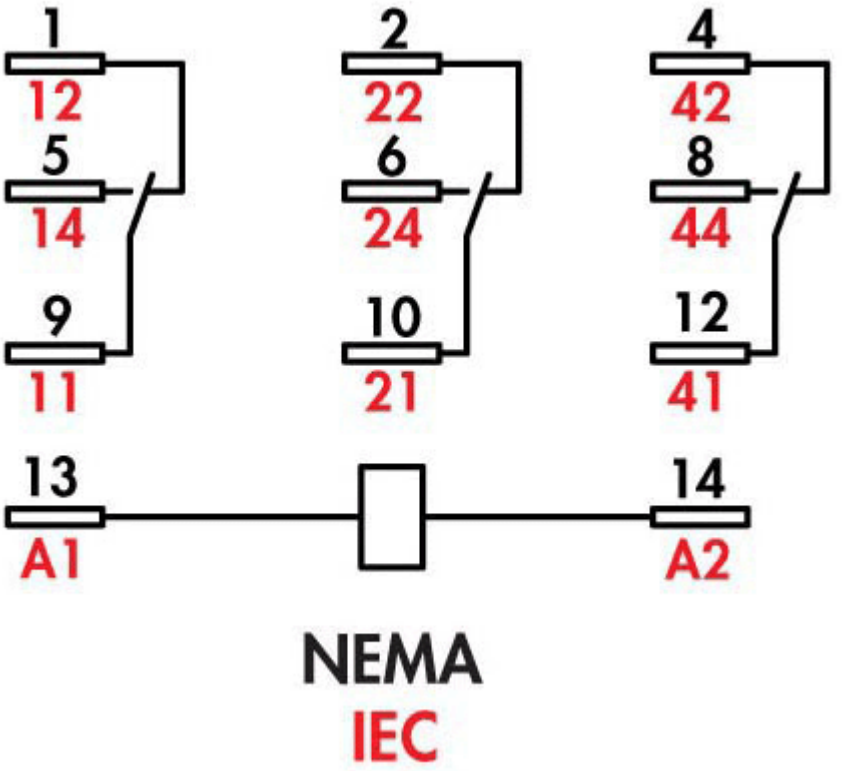
## Connections and Wiring Diagrams