Power Quality
Catalog | 2014

VarSet

Low-Voltage Capacitor Banks

SQUARE D™
by Schneider Electric

Contents

Choice of Compensation Type	2
Construction of References – Principle	3
Offer Overview	4
Offer Range	6
General Characteristics	8
Physical and Electrical Steps	9
VarSet Components	10
Dimensions and Weights	12

Energy Efficiency

Immediate Savings

Choice of Compensation Type

Devices using power electronics (variable speed drives, rectifiers, UPS, arc furnaces, fluorescent lamps, etc.) generate harmonic currents in electrical networks.

Such harmonics can interfere with the operation of many devices, including capacitors, which are highly sensitive to harmonics.

A high level of harmonic pollution causes capacitors to overheat and age prematurely (breakdown).

Different types of compensation must be chosen according to the power of the harmonic generators: standard or detuned. It can be selected as follows:

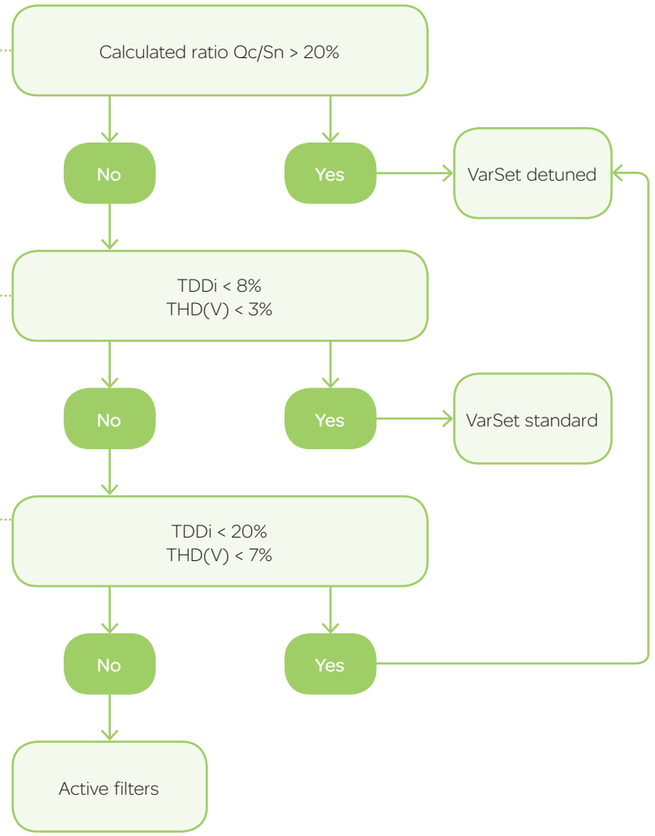

What are these ratios?

> The Total Current Demand Distortion (TDDi) ratio is harmonic current distortion against the full load (demand) level.

> The percentage of Total Harmonic Voltage Distortion (THD(V)) is measured at the transformer secondary, at **maximum load and without capacitors**.

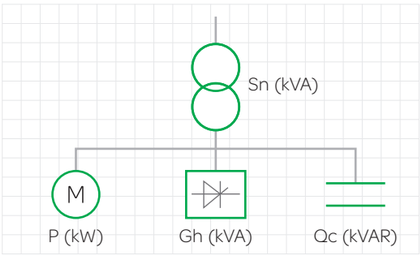

***Sn**: apparent power of the transformer.*

***Gh**: apparent power of harmonics-generating receivers (variable speed motors, static converters, power electronics, etc.).*

***Qc**: power of the compensation equipment.*

***V**: network voltage.*

Construction of References – Principle

V	L	V	A	W	2	N	6	6	1	0	0	A	A
Equipment type							**Voltage**	**Frequency**	**Power**			**Used to differentiate incomer**	
VLVAW2N: small-size standard							6 = 480 V	6 = 60 Hz	100 = 100 kVAR			AA = lugs	
VLVAW3N: mid-size standard							7 = 600 V					AB = incoming CB	
VLVAF4P: detuned VLVFF4P: fixed detuned													

Examples

b VLVAF4P76200AB = VarSet Detuned, 600 V, 60 Hz, 200 kVAR with incoming circuit breaker

Offer Overview

		Standard VLVAW2N	Standard VLVAW3N	Detuned VLVAF4P/VLVFF4P
480 V 60 Hz	Lugs	25 to 100 kVAR	125 to 250 kVAR	75 to 200 kVAR
	Incoming CB		125 to 300 kVAR	
600 V 60 Hz	Lugs	25 to 100 kVAR	125 to 250 kVAR	75 to 200 kVAR
	Incoming CB			

VLVAW2N

VLVAW3N

VLVAF4P

Offer Overview
Key Features

Key Features

- **b Auxiliary transformer (120 V) included**
- **b Top cable entry and connections**
- **b NEMA 1**

Options

- **b Incoming circuit breaker protection option with rotary handle**
- **b Plinth accessory for floor mounting**
  - v Included for VLVAF4P and VLVFF4P version
  - > For VLVAW2N and VLVAW3N versions, order the following part #'s:
    for Enclosure VLVAW2N: order part #NSYSPF8100 and part #NSYSPS4100
    for Enclosure VLVAW3N: order part #NSYSPF10100 and part #NSYSPS4100

- **b Communication option**
  - v NRC12 controller + modbus communication module
  - > Order your reference with addition of suffix C
- **b Sprinkler proof**
  - v Included in 600 V offer

A Current Transformer Is Required For Automatic Control

In order to have automatic control, a current transformer must be ordered in addition to the PFC bank.

A current transformer (not included) is necessary to provide accurate network information to the VarSet's controller in order to apply the correct quantity of kVAR at any given time. It is recommended to choose a Split Core Current Transformer Model 270R from the following list of options.

Note: CT must be sized to your network and have a secondary rating of 5A. More details on the CT can be found in document 4210CT9701.

Catalog Number	Current Rating *(Amperes)
270R-501	500:5
270R-102	1000:5
270R-152	1500:5
270R-202	2000:5
270R-302**	3000:5
270R-402**	4000:5

Note: When selecting a CT be sure to use proper rating factors for ambient temperature conditions.

** Rating Factor 30 °C/80 °F Ambient Temp. = 1.33*
Rating Factor 55 °C/131 °F Ambient Temp. = 1.0

*** Models -302 and -402*
Rating Factor 30 °C/80 °F Ambient Temp. = 1.0
Rating Factor 55 °C/131 °F Ambient Temp. = 0.75

Offer Range
480 V/60 Hz

Low-Polluted Network

Standard		
Power	Lugs	Incoming CB
25	VLVAW2N66025AA	VLVAW2N66025AB
50	VLVAW2N66050AA	VLVAW2N66050AB
75	VLVAW2N66075AA	VLVAW2N66075AB
100	VLVAW2N66100AA	VLVAW2N66100AB
125	VLVAW3N66125AA	VLVAW3N66125AB
150	VLVAW3N66150AA	VLVAW3N66150AB
175	VLVAW3N66175AA	VLVAW3N66175AB
200	VLVAW3N66200AA	VLVAW3N66200AB
225	VLVAW3N66225AA	VLVAW3N66225AB
250	VLVAW3N66250AA	VLVAW3N66250AB
275	VLVAW3N66275AB	VLVAW3N66275AB
300	VLVAW3N66300AB	VLVAW3N66300AB

Polluted Network With Detuned Reactors

Automatic		
Power	Lugs	Incoming CB
75	VLVAF4P66075AA	VLVAF4P66075AB
100	VLVAF4P66100AA	VLVAF4P66100AB
125	VLVAF4P66125AA	VLVAF4P66125AB
150	VLVAF4P66150AA	VLVAF4P66150AB
175	VLVAF4P66175AA	VLVAF4P66175AB
200	VLVAF4P66200AA	VLVAF4P66200AB
Fixed		
Power	Lugs	Incoming CB
75	VLVFF4P66075AA	VLVFF4P66075AB
100	VLVFF4P66100AA	VLVFF4P66100AB
125	VLVFF4P66125AA	VLVFF4P66125AB
150	VLVFF4P66150AA	VLVFF4P66150AB
175	VLVFF4P66175AA	VLVFF4P66175AB
200	VLVFF4P66200AA	VLVFF4P66200AB

Note:
Low-Polluted Network = TDDi < 8%, THD(V) < 3%
Polluted Network = TDDi < 20%, THD(V) < 7%

Offer Range
600 V/60 Hz

Low-Polluted Network

Standard		
Power	Lugs	Incoming CB
25	VLVAW2N76025AA	VLVAW2N76025AB
50	VLVAW2N76050AA	VLVAW2N76050AB
75	VLVAW2N76075AA	VLVAW2N76075AB
100	VLVAW2N76100AA	VLVAW2N76100AB
125	VLVAW3N76125AA	VLVAW3N76125AB
150	VLVAW3N76150AA	VLVAW3N76150AB
175	VLVAW3N76175AA	VLVAW3N76175AB
200	VLVAW3N76200AA	VLVAW3N76200AB
225	VLVAW3N76225AA	VLVAW3N76225AB
250	VLVAW3N76250AA	VLVAW3N76250AB

Polluted Network With Detuned Reactors

Automatic		
Power	Lugs	Incoming CB
75	VLVAF4P76075AA	VLVAF4P76075AB
100	VLVAF4P76100AA	VLVAF4P76100AB
125	VLVAF4P76125AA	VLVAF4P76125AB
150	VLVAF4P76150AA	VLVAF4P76150AB
175	VLVAF4P76175AA	VLVAF4P76175AB
200	VLVAF4P76200AA	VLVAF4P76200AB
Fixed		
Power	Lugs	Incoming CB
75	VLVFF4P76075AA	VLVFF4P76075AB
100	VLVFF4P76100AA	VLVFF4P76100AB
125	VLVFF4P76125AA	VLVFF4P76125AB
150	VLVFF4P76150AA	VLVFF4P76150AB
175	VLVFF4P76175AA	VLVFF4P76175AB
200	VLVFF4P76200AA	VLVFF4P76200AB

General Characteristics

VarSet

Environment		
Installation	Indoor	
Humidity	up to 95%	
Maximum altitude	2000 m	
Enclosure		
Degree of protection	NEMA 1	
Color	RAL 7035	
Degree of mechanical resistance	IK10	
Steps		
Step protection	With circuit breaker	
Electrical Characteristics		
Connection type	Three-phase	
Power losses	< 2.5 W/kVAR without detuned reactors	
	< 6 W/kVAR with detuned reactors	
Tuning order (VarSet Detuned)	4.2 p.u. (60 Hz ref)	
Maximum permissible over voltage	1.1 x Un, 8 h every 24 h	
Standards		
	> CSA 22.2 No. 190	
	> UL810, UL508a	
Incoming Connection Short Circuit Rating	**With Incoming CB**	**With Lugs**
From 25 to 100 kVAR/no reactors	65 kA (480 V) 50 kA (600 V)	25 kA
From 125 to 300 kVAR/no reactors	65 kA (480 V) 50 kA (600 V)	25 kA
With reactors	65 kA (480 V) 50 kA (600 V)	25 kA

Physical and Electrical Steps

480 V and 600 V - 60 Hz

Type	kVAR	Min Step	Resolution	Num Mechanical Steps (CBs)	Num Electrical Steps	Sequence	Electrical Steps (Resolution)
Standard	25	12,5	2x12,5	2	2	1,1,1,1	12,5/25,0
	50	12,5	2x12.5 + 1x25	3	4	1.1.2.2	12,5/25,0/37,5/50,0
	75	12,5	1x12,5 + 1x25 + 1x37,5	3	6	1,2,3,3	12,5/25,0/37,5/50,0/62,5/75,0
	100	25	2x25 + 50	3	4	1,1,2,2	25/50/75/100
	125	25	1x25 + 2x50	3	5	1.2.2.2	25/50/75/100/125
	150	25	2x25 + 2x50	4	6	1.1.2.2	25/50/75/100/125/150
	175	25	1x25 + 3x50	4	7	1,2,2,2	25/50/75/100/125/150/175
	200	25	2x25 + 3x50	5	5	1,1,2,2,2	25/50/75/100/125/150/175/200
	225	25	1x25 + 4x50	5	9	1.2.2.2	25/50/75/100/125/150/175/200/225
	250	50	5x50	5	5	1,1,1,1	50/100/150/200/250
	275	25	1x25 + 5x50	6	11	1,2,2,2	25/50/75/100/125/150/175/200/225/250/275
	300	50	6x50	6	6	1.1.1.1	50/100/150/200/250/300
Detuned	75	25	1x25 + 1x50	2	3	1,2,2,2	25/50/75
	100	25	2x25 + 1x50	3	4	1,1,2,2	25/50/75/100
	125	25	1x25 + 2x50	3	5	1.2.2.2	25/50/75/100/125
	150	25	2x25 + 2x50	4	6	1,1,2,2	25/50/75/100/125/150
	175	25	1x25 + 3x50	4	7	1.2.2.2	25/50/75/100/125/150/175
	200	50	4x50	4	4	1,1,1,1	50/100/150/200

VarSet Components

major components are Square D by Schneider Electric components

Our VarSet offer comes with the assurance that the major components inside are manufactured by Square D by Schneider Electric, thus ensuring high quality.

VarPlusCan capacitors

VarPlusCan: Heavy Duty Capacitors

The VarSet range of equipment is integrated with heavy-duty aluminum can capacitors (VarPlusCan) that are specially designed and engineered to deliver reactive power continuously with low losses.

Features:

- continuous service
- high overload capabilities with good thermal and mechanical properties
- self-healing with discharge resistors
- pressure-sensitive disconnector on all three phases
- special film resistivity and metallization profile for higher thermal efficiency and enhanced life expectancy

TeSys™ LC1D range of contactors

TeSys Contactors

Capacitor control is accompanied by a transient state resulting from the capacitor load. This generates a very high overcurrent, equivalent to a short circuit of short duration.

Unique technology contactors
The contactors used in our devices are specifically designed for capacitor control. They are fitted with a contact block allowing the current to pass on closing through damping resistors that limit the current on energization.

Personal safety
The contactors cannot be operated manually. The contactors are fitted with covers to protect them from direct contact.

Safety of installations
Damping resistors are used to reduce transient over-voltage.

Continuing service life
These contactors are a ready-to-use solution that avoids the installation of inrush reactors. Their service life is far longer than that of conventional solutions.

Detuned reactors

Detuned Reactors

Detuned reactors enable the protection of capacitors against harmonics. They are recommended for usage in harmonic-rich networks, and come with 4.2 p.u. tuning order.

They are equipped with a thermal protection device for step disconnection.

Spatial enclosures

Spatial Enclosures

- NEMA 1
- IK10: Maximum possible protection against mechanical shocks and can withstand 20 joules of energy.

VarSet Components

Circuit breakers

Step Circuit Breaker

Each physical step is protected by a step circuit breaker that ensures that our equipment is highly fault-tolerant, ensuring continuity of service even when one or more capacitors are malfunctioning. This superior protection provides a stage overload protection that cannot be achieved with HRC fuses, furthermore it eliminates the need for spare fuses. The details of the steps are on page 9.

Incoming Circuit Breaker

Square D by Schneider Electric circuit breakers are designed to ensure maximum continuity of service. Our VarSet range of products has the option of being protected with an incoming circuit breaker. Our range comes with an option to integrate circuit breakers of 65 kA breaking capacity for 480 V networks and 50 kA for 600 V networks. Rotary handle is also provided to facilitate the disconnection of circuit breakers before opening the door. This is an additional protection mechanism to ensure personnel safety.

Varlogic NR6

Varlogic N Power Factor Controller

Our range of Varlogic N series of Power Factor Controllers are simple to program, reliable, and intelligent. Varlogic Controllers offer user-friendly features such as a large backlit display, intuitive menus, ergonomic layout of buttons, direct display of main measurements, and intelligent self set-up. The Varlogic N Controllers constantly measure the reactive power of the installation, and control the connection and disconnection of capacitor steps, to obtain the required power factor. The range is composed of:

- NR12: control up to 12 capacitor steps
- NRC12 with modbus: control up to 12 capacitor steps, with advanced diagnostic functions and integrated modbus interface communication module, which enables Varlogic functions to be connected to the energy server EGX300. The EGX300 is an integrated gateway-server that requires only a Web browser and Ethernet network to log and display real-time data and trend plots.

Varlogic NRC12

Auxiliary Transformer

Auxiliary units, such as contactors, controllers, and fans, operate only on 120 Volts AC. The voltage for the auxiliaries has to be converted by an auxiliary transformer. In order to simplify the installation process, VarSet equipment comes with an integrated auxiliary transformer.

Other Accessories

Accessories, such as plinth (for easier installation on uneven surfaces), can be ordered as an option along with the VarSet equipment.

Dimensions and Weights

VLVAW2N

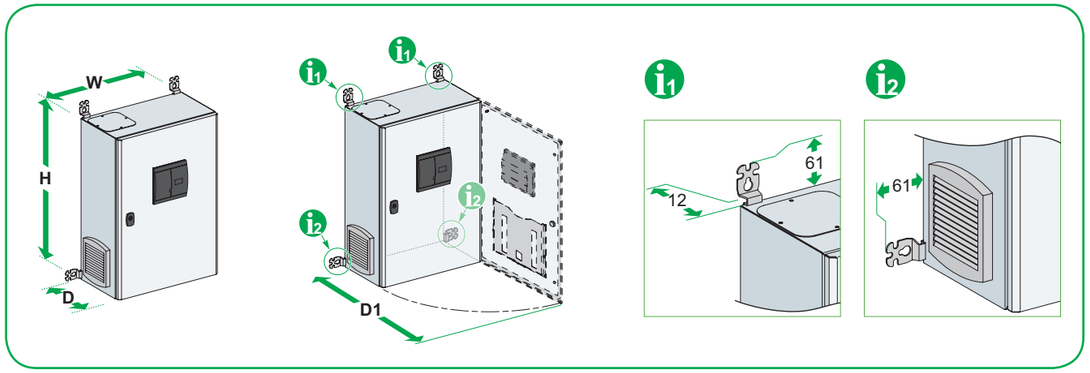

VLVAW3N

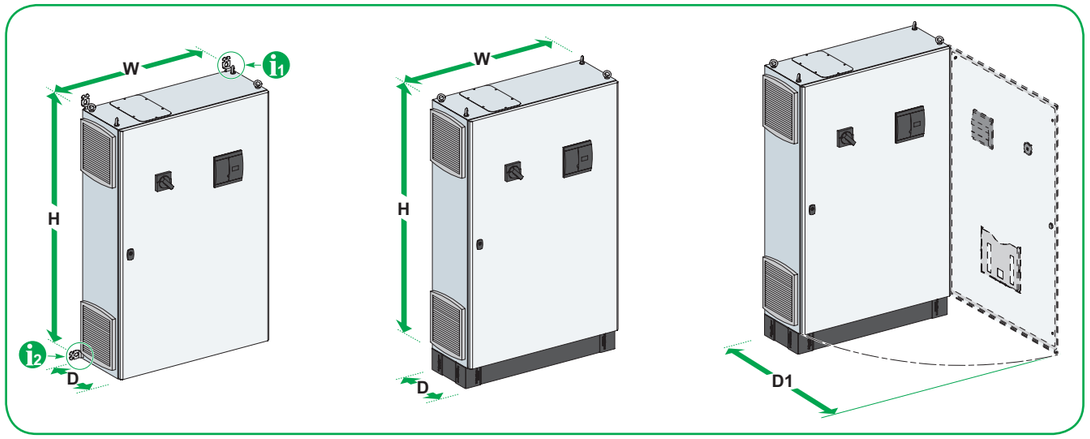

VLVAF4P and VLVFF4P

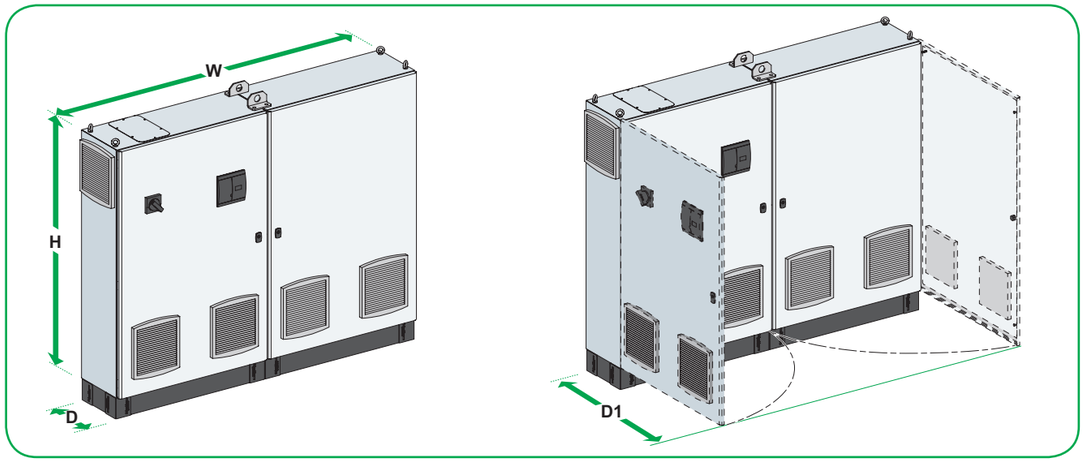

Dimensions and Weights

Dimensions (mm/inch) and Maximum Weight (kg/pounds)			
	VLVAW2N	VLVAW3N	VLVAF4P/VLVFF4P
H	850/33.5	1200/47.2	1200/47.2
W	800/31.5	1000/39.4	1300/51.2
D	400/15.7	400/15.7	400/15.7
D1	1200/47.2	1400/55.1	1200/47.2
Weight	80/175	125/275	265/585

Does not include plinth for VLVAW2N and VLVAW3N, optional, which adds 100 mm to height.

		Standard VLVAW2N	Standard VLVAW2N	Detuned VLVAF4P/VLVFF4P
480 V 60 Hz	Lugs	25 to 100 kVAR	125 to 250 kVAR	75 to 200 kVAR
	Incoming CB		125 to 300 kVAR	
600 V 60 Hz	Lugs	25 to 100 kVAR	125 to 250 kVAR	75 to 200 kVAR
	Incoming CB			

Schneider Electric Industries SAS

US
Schneider Electric
105 Summit Park Dr.
Salisbury, NC 28146
1-888-SquareD (1-888-778-2733)
www.schneider-electric.com/us

© 2014 Schneider Electric. All Rights Reserved. Schneider Electric, Square D, VarSet, TeSys, and Varlogic are trademarks owned by Schneider Electric Industries SAS or its affiliated companies.
All other trademarks are the property of their respective owners. • www.schneider-electric.com • 998-1253171_US

5830CT1401

September 2014