Product data sheet

Specifications

To be discontinued

Modular box PC, Harmony iPC, Optimized DC 4 GB M.2 DC Windows

HMIBMOMA5DDF10L

Discontinued on: Apr 30, 2025

To be end-of-service on: Apr 30, 2029

Product availability: Non-Stock - Not normally stocked in distribution facility

Main

Range of Product	Harmony iPC
Device short name	Modular BOX PC Optimized Expandable
Product or Component Type	Modular box PC
Range Compatibility	IDisplay Modular Display HMIDM
Accessory / separate part destination	PC panel HMIDM modular display
Software package	Node-RED and system nodes restore IIoT Wiring Operating System Restore McAfee white listing installer cyber security license not included EcoStruxture secure connect advisor annual subscription cyber security license not included EcoStruxure Operator Terminal Expert run time HMI license not included EcoStruxure machine SCADA expert run time HMI/SCADA on configured offer only EcoStruxure augmented operator advisor server augmented operator license not included

Complementary

Mounting Location	Book mounting Flat mounting Wall mounting
Memory description	4 GB RAM DDR3 internal not expandable)
Free slots	1 M.2 SSD 1.0 Internal SATA HDD/SSD with adapter HMIYBADHDDBMO1 to mount
Number of slots available for expansion	1.0 mini PCIe
Display resolution	3200 x 2000 pixels at 60 Hz
Watchdog timer	1…255 ms
Electrical connection	Screw connector, connector type: pin, 1 way, circuit application: ground - location: bottom Connector, connector type: SMA, 3 ways - location: top
Cyber secured boot	Secure password boot UEFI
[Us] rated supply voltage	24 V DC power supply 100...240 V AC power supply
Supply voltage limits	9.6…28.8 V
Control type	ON/OFF button
Impregnation material	Conformal coated
Main type	Optimised

Price is “List Price” and may be subject to a trade discount – check with your local distributor or retailer for actual price.

Disclaimer: This documentation is not intended as a substitute for and is not to be used for determining suitability or reliability of these products for specific user applications

Number of slots	1 slot(s) for mini PCI Express full-size without optional interface plate,
Type of cooling	Fanless
Inrush current	2.03 A
Width	7.4 in (187 mm)
Height	5.9 in (150 mm)
Product Weight	2.9 lb(US) (1.3 kg)

Environment

Environmental characteristic	Hazardous location with additional adaptor HMIYMMAC1
Standards	Class A group 1 IEC 55011 IEC 61000-6-4 IEC 61131-2 FCC part 15 UL 61010
Quality labels	CE
Directives	2004/108/EC - electromagnetic compatibility 2006/95/EC - low voltage directive
Operating altitude	6561.68 ft (2000 m) IEC 60664-1
Product certifications	CE CULus CULus CSA 22-2 No 142 CULus HazLoc Class I Division 2 ANSI/ISA 12-12-01 CULus HazLoc Class I Division 2 CSA 22-2 No 213 ATEX CCC RCM EAC IEC Ex hazardous locations 3GD zone 2/22
Ambient air temperature for operation	32…131 °F (0…55 °C) by default) IEC 60068-2-2 32…131 °F (0…55 °C) flat mounting 32…122 °F (0…50 °C)HDD 32…122 °F (0…50 °C) flat mountingHDD

Ordering and shipping details

Category	US10MC222577
Discount Schedule	0MC2
GTIN	3606481245755
Returnability	No
Country of origin	TW

Packing Units

Unit Type of Package 1	PCE
Number of Units in Package 1	1
Package 1 Height	5.91 in (15.0 cm)
Package 1 Width	9.25 in (23.5 cm)
Package 1 Length	14.76 in (37.5 cm)
Package 1 Weight	4.634 lb(US) (2.102 kg)
Unit Type of Package 2	S04
Number of Units in Package 2	3
Package 2 Height	11.81 in (30.0 cm)

Package 2 Width	15.75 in (40.0 cm)
Package 2 Length	23.62 in (60.0 cm)
Package 2 Weight	15.4 lb(US) (7.0 kg)

Environmental Data

Schneider Electric aims to achieve Net Zero status by 2050 through supply chain partnerships, lower impact materials, and circularity via our ongoing “Use Better, Use Longer, Use Again” campaign to extend product lifetimes and recyclability.

Environmental Data explained

How we assess product sustainability

Environmental footprint

Carbon footprint (kg CO2 eq, Total Life cycle)	1211
Environmental Disclosure	Product Environmental Profile

Use Better

Materials and Substances

F-gas usage performance	Only air and vacuum used for insulation / breaking, no F-gas including SF6
Packaging made with recycled cardboard	Yes
Packaging without single use plastic	Yes
EU RoHS Directive	Pro-active compliance (Product out of EU RoHS legal scope)
SCIP Number	3fe7d895-f8a3-452a-ad75-1d17e7e6e6eb
REACh Regulation	REACh Declaration
California proposition 65	WARNING: This product can expose you to chemicals including: Lead and lead compounds, which is known to the State of California to cause cancer and birth defects or other reproductive harm. For more information go to www.P65Warnings.ca.gov

Use Again

Repack and remanufacture

Circularity Profile	End of Life Information
Removable battery	Yes
Take-back	No
WEEE	The product must be disposed on European Union markets following specific waste collection and never end up in rubbish bins.

Dimensions Drawings

Dimensions

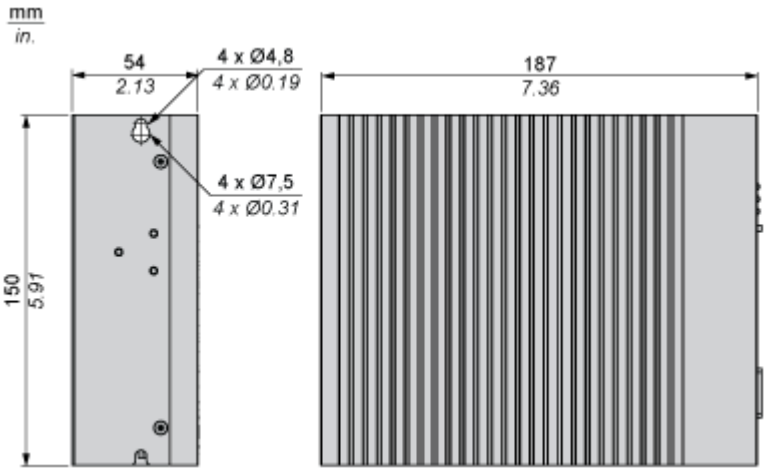

Mounting and Clearance

Spacing Requirements

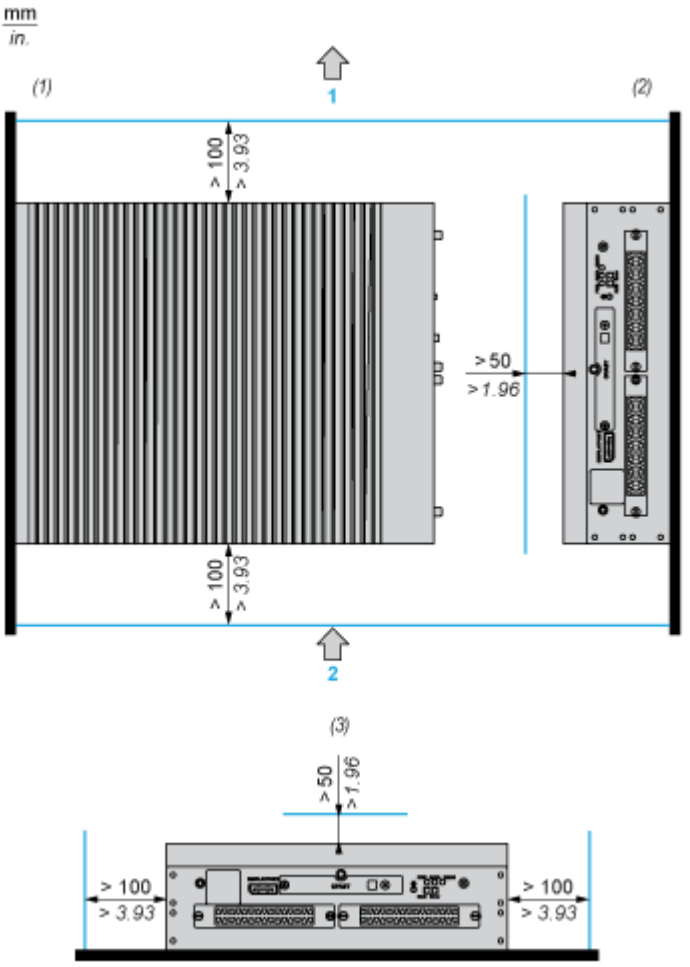

1 : Air out

2 : Air in

(1) Book mounting : Vertical mounting with rear fixing

(2) Wall mounting : Vertical mounting with side fixing

(3) Horizontal mounting