Section 5

Protection, Control, and Energy Automation

Introduction — Energy Automation Solutions 5-2

Schneider Electric Energy Automation Solutions 5-2
Overview of System Protection Products 5-2

PowerLogic Easergy™ P Series Protection Relays 5-3

PowerLogic Easergy P Series — Introduction 5-3
PowerLogic Easergy P5 Range 5-3
PowerLogic Easergy P3 Range 5-5

V125 Protection Relays 5-9

ECOFIT Protection Relays 5-10

Sepam™ Protection Relays 5-11

The Sepam™ Range — Introduction 5-11
Sepam™ Protection Configurations 5-12
Sepam™ Characteristics 5-13
Sepam™ 20 Ordering Configurations 5-14
Sepam™ 40 Ordering Configurations 5-14
Sepam™ 80 Ordering Configurations 5-15
Sepam™ Substation Applications 5-16
Sepam™ Motor Applications 5-17
Sepam™ Transformer Applications 5-18
Sepam™ Generator Applications 5-19
Sepam™ Busbar Applications 5-20
Sepam™ Capacitor Applications 5-21

MiCOM Protection Relays 5-22

The MiCOM Range — Introduction 5-22
MiCOM Series Characteristics 5-22
MiCOM Self-Powered Applications 5-24
MiCOM Substation Applications 5-24
MiCOM Motor Applications 5-26
MiCOM Transformer Applications 5-27
MiCOM Generator Applications 5-28
MiCOM Busbar Applications 5-29
MiCOM Distance Applications 5-30
MiCOM Line Differential Applications 5-31
MiCOM Railway Applications 5-32

SAGE RTUs (Remote Terminal Units) 5-33

The SAGE RTU Range 5-33
SAGE 2400 RTUs 5-34
SAGE 3030 Magnum RTUs 5-35
SAGE 4400 RTUs 5-35
SAGE 1410 RTUs 5-36
SAGE 1430 RTUs 5-36
SAGE 1450 RTUs 5-37

Easergy™ T300 RTUs (Remote Terminal Units) 5-38

The Easergy T300 RTU Range 5-38
Easergy™ HU250 Communication Gateway 5-39
Easergy™ SC150 MV Switch Controller 5-39
Easergy™ LV150 LV Transformer Monitor 5-39

Protection Relays

PowerLogic™ Easergy™ P5

PowerLogic™ Easergy™ P3

ECOFIT™ 50/51

V125

Sepam™

MiCOM™

SAGE RTUs

2400

1410

1430

1450

4400

3030 Magnum

Easergy™ T300 RTUs

HU250

SC150

LV150

PS50

PS25

© 2022 Schneider Electric
All Rights Reserved
9/22/2022

Introduction — Schneider Electric Energy Automation Solutions

Schneider Electric has proven solutions for the protection, monitoring and control of any critical infrastructure power system, whether large or small. Starting with a full range of Protective Relays for Medium or Low voltage distribution systems that provide dependability and reliability, Schneider Electric fits the bill. Sepam, MiCOM and ECOFIT are the front line of protection. Add the V125 for Arc Flash protection and you have a robust system for equipment protection. Let Schneider Electric's Energy Automation Solutions provide the Protection, Monitoring, and Control you need!

Schneider Electric's ranges for Remote Terminal Units (RTU) includes SAGE and T300. SAGE is a rack mount solution offering IED integration, NERC CIP security, IEC 61131-based logic functions, communications protocols, and a custom applications library.

T300 is a modular form factor feeder RTU for Medium Voltage and Low Voltage public distribution network management.

System Protection Solutions

Schneider Electric's family of protective relays have been protecting power systems world wide for over 100 years. From electric utilities to commercial buildings and data centers, customers know that Schneider Electric has the right relay solution for them. Today's modern relays are much more than simple overcurrent devices. They provide power system protection as well as arc flash protection in one device all while communicating to SCADA or DCS systems seamlessly. Whether it is a new installation or a retrofit opportunity, Schneider Electric has the answer.

Powerlogic Easergy P5

Powerlogic Easergy P5

The Powerlogic Easergy P5 is a protective relay for more demanding medium voltage applications. It offers users dedicated features for industry-leading protection relay functionality to reduce risks, improve reliability, all with advanced connectivity. The P5 presents a major step forward for protection relays, bringing a number of best-in-class features together in one device.

Built-in arc-flash protection functions

Arc flash events can occur when switching or during unexpected conditions. The protection function detects if an arc-flash exists and takes action within milliseconds to isolate the connected circuit breaker.

Advanced cybersecurity

IEC 62443 compliant, the P5 has been designed with an advanced cybersecurity package. This means reduced exposure to cyber threats and improved operational security. Included by default are important security features such as password management, port hardening, and secured communication compliant to the latest international standards.

Intuitive withdrawable design

With a handle built in as part of the design, the P5 can be quickly disconnected or exchanged to speed up maintenance. Wiring, data, communication, and settings (including backup) can be stored with the panel and will be there when the relay is reconnected.

Improved recovery time

When maintenance or testing is required, the P5 helps dramatically decrease your outage recovery time. The backup memory can automatically restore settings, you can continue your operations in as little as 10 minutes.

Greater connectivity

The P5 protection relay features a wide variety of communication protocols and can support up to 3 Ethernet protocols simultaneously, including dual redundancy with PRP/HSR and RSTP protocols. All communication modules can be added at any time, including on-site, during the product life cycle to allow you to upgrade your device in line with future network evolutions.

Powerlogic Easergy P3

Powerlogic Easergy P3

The P3 is a complete range of protective relays for medium voltage applications. The innovative package boasts more than 40 protection functions and a wide variety of communication protocols for enhanced connectivity and interoperability, including:

- Universal protection from a single box, with feeder, motor, and transformer protection functions
- Motor, transformer, generator, and line differential protection
- Nine communication protocols in one box, including IEC 61850
- Embedded virtual injection testing system
- Built-in optical arc flash protection
- Programmable logic and protection stages

An example of Schneider Innovation at Every Level, the built-in virtual injection testing system enables a safer configuration process and gives you and your customers on-going peace of mind. Additionally, the P3 allows you to monitor your protection relay and circuit breaker, enabling full visibility of the health of your electrical installation.

© 2022 Schneider Electric
All Rights Reserved
9/22/2022

V125 Arc Flash Module

V125 Arc Flash Module

Arc flash incidents are very real and very dangerous. The Schneider Electric V125 arc flash module provides detection in as low as 2 milliseconds to help mitigate equipment damage. Up to four (4) point sensors are brought into the V125 from different compartments in switchgear, such as the cable, breaker and bus compartments. The module is set with simple DIP switches and can be set up to deliver zones of arc flash protection. Installation is easy with a DIN rail or a door mount option.

ECOFIT 50/51

ECOFIT 50/51

The ECOFIT 50/51 Plug and Protect numerical relay is a direct replacement for many GE IAC and IFC relays that are still in service today. No re-wiring is required. Remove the old relay and install the ECOFIT 50/51 and its cover. The relay has 31 different overcurrent curves built in and features an instantaneous element that can trip in as little as 1.5 cycles. Gain the benefits of waveform capture, sequence of events and metering that were not possible with the older electromechanical relays.

Sepam Digital Relays

Sepam™ Digital Relays

Sepam relays feature outstanding modularity and are ideal for a myriad of applications, including industrial and commercial feeder, motor, transformer, generator, busbar, and capacitor applications. Built-in breaker control, automatic throwover, and zone selective interlocking logic makes Sepam easy to configure and test. The family consists of three (3) ranges, Series 20, Series 40 and Series 80, allowing customers to purchase the right amount of relay for their particular application.

MiCOM Relays

MiCOM Relays

MiCOM relays provide utility grade protection with deep cyber security features. Large or small power systems; simple or complex applications are all covered in the MiCOM line of products.

PowerLogic Easergy protective relays are a complete range of devices for medium voltage applications, including feeder, motor, transformer, line, and generator protection. Built on more than 100 years of experience in medium-voltage protection relays with MiCOM, SEPAM, and Vamp, the new PowerLogic Easergy protective relays have been designed to meet the most demanding needs for electrical protection, connectivity, and safety, while taking a step forward in efficiency.

The PowerLogic Easergy P5 Range

Features and Benefits

- Built-in Arc flash protection
- Increased number of inputs and outputs for more possibilities
- Compliance to IEC62443 SL1 cybersecurity standard
- Nearby control via mobile app and embedded web-server
- Withdrawable design with secured CT connections while drawn-out
- Nine communication protocols out of the box
- Natively compliant to IEC61850 standard
- Modular design for communication port options and back-up memory
- Low Power Current Transformer (LPCT) / Voltage Transformer (LPVT) compatible
- Powerful logic configuration
- Built-in virtual injection testing

Refer to catalog NRJED313567EN for the PowerLogic Easergy P5 Series.

PowerLogic Easergy P5 Characteristics

Characteristics		P5F30	P5M30
Application	Feeder	•	—
	Motor	—	•
Measuring inputs	Phase current	1/5A CT (x3) or LPCT (x3)	

© 2022 Schneider Electric
All Rights Reserved
9/22/2022

Characteristics		P5F30	P5M30
	Residual current	1/5A CT & 1A CT or CSH core balance CT	
	Voltage	VT (x4) or LPVT (x4)	
Arc-flash sensor inputs		0 to 6 point sensors	
Digital	Inputs	4 to 40	
	Outputs	3 to 18 + Watchdog (WD)	
Temperature sensor inputs		0 to 16 (external modules)	
Front ports		1 USB for configuration 1 USB for USB key	
Nominal power supply		24 - 48 VDC or 48-250 VDC ; 100-230 VAC	
Ambient temperature, in service		-40 to 70°C (-40 to 158°F)	
Communication			
Hardware modules	Extension + Backup memory	•	
	Serial	•	
	Ethernet	•	
	2nd Ethernet	•	
Protocols	IEC61850 Ed1 & Ed2	•	
	IEC 60870-5-101 & 103	•	
	DNP3 over Ethernet	•	
	DNP3 serial	•	
	Modbus over Ethernet	•	
	Modbus serial	•	
	EtherNet IP	•	
Redundancy protocols	RSTP	•	
	PRP / HSR	•	
Time synchronization	Pulse, IRIG-B[1]	•	
	SNTP, PTP IEEE 1588 v2[2]	•	
Others			
Control		6 controlled + 2 monitored objects Mimic	
Logic (Matrix + Logic Equations)		•	
Cybersecurity		•	
Draw-out device (withdrawability)		•	
Hardware dimensions (W/H/D)		152 / 176 / 219 mm (6.0 / 6.93 / 8.62 in)	

PowerLogic Easergy P5 Applications

Table 5.1: Protection Functions

Protection Functions	ANSI code	P5F30	P5M30
Current protection			
Phase overcurrent	50/51	3	3
Earth/ground fault overcurrent[3]	50N/51N	5 / 8	5 / 8
Directional phase overcurrent	67	4	4
Directional earth/ground fault overcurrent	67N	3	3
Transient intermittent/ground fault	67NI	1	—
Neutral admittance	21YN	2	2
Negative sequence overcurrent	46 (I2/I1)	1	1
Current unbalance, Broken conductor	46BC (I2)	1	-
Breaker failure	50BF	1	1
Phase undercurrent	37	—	1
Switch on to fault (SOTF)	50HS	1	1
Cold load pickup (CLP or CLPU)	—	1	1
Voltage protection			
Undervoltage	27	3	3
Overvoltage	59	3	3
Earth/ground fault overvoltage	59N	3	3
Negative sequence overvoltage	47	2	2
Frequency protection			
Over and/or underfrequency	81	2	2
Underfrequency	81U	2	2
Rate of change of frequency	81R	2	—
Thermal protection			
Thermal overload	49	1	1
Temperature monitoring	38	16	16
Power protection			
Wattmetric earth/ground fault	32N	2	2
Directional active underpower	32/37N	2	2
Rotating machine protection			
Frequent start inhibition	66	—	1
Motor start-up supervision, locked rotor	48/51LR	—	1
Positive sequence undervoltage	27P	—	2
Underspeed[4]	14	—	2
Overspeed[4]	12	—	2
Anti-backspin[4]	ABS	—	1
Line protection			
Fault locator	21FL	1	—
Auto-Recloser	79	1	—
Transformer protection			
Magnetizing inrush detection	68H2	1	1
Fifth harmonic detection	68H5	1	1
Capacitor protection			

[1] IRIG-B module is a separate accessory
[2] PTP IEEE 1588 v2 is availaible with HSR/PRP communication board
[3] Number of stages depends on the number of residual current inputs.
[4] Function available if 12 DI / 4 DO board is present.

© 2022 Schneider Electric
All Rights Reserved
9/22/2022

Table 5.1 Protection Functions (cont'd.)

Protection Functions	ANSI code	P5F30	P5M30
Capacitor bank unbalance	51C	2	—
Capacitor overvoltage	59C	1	—
Other protection			
Arc-flash detection	50ARC	8	8
Programmable stages	99	8	8
Programmable curves	—	3	3
Control, monitoring, supervision			
Synchronization check	25	1	—
Lockout relay	86	1	1
CT supervision	60	1	1
VT supervision	60	1	1
Setting groups	—	4	4

Table 5.2: Control Functions

Control Functions	P5F30	P5M30
Control with Mobile application	•	•
Switchgear control and monitoring	6	6
Switchgear monitoring only	2	2
Programmable switchgear interlocking	•	•
Local control on single-line diagram	•	•
Local switchgear control with OPEN/CLOSE keys	•	•
Local/remote function	•	•
Function keys	7	7
Custom logic (equations)	•	•

Table 5.3: Measurement Functions

Measurement functions	P5F30	P5M30
RMS current values	•	•
RMS voltage values	•	•
RMS active, reactive and apparent power	•	•
Frequency	•	•
Fundamental frequency current values	•	•
Fundamental frequency voltage values	•	•
Fundamental frequency active, reactive and apparent power values	•	•
Power factor	•	•
Motor speed detection*[5]*	•	•
Energy values: active and reactive	•	•
Demand values: phase currents	•	•
Demand values: active, reactive, apparent power and power factor	•	•
Maximum demand values: phase currents	•	•
Minimum and maximum demand values: RMS phase currents	•	•
Minimum and maximum demand values: active, reactive, apparent power and power factor	•	•
Maximum demand values over the last 31 days and 12 months: active, reactive, apparent power	•	•
Minimum demand values over the last 31 days and 12 months: active, reactive power	•	•
Maximum and minimum values: currents	•	•
Maximum and minimum values: voltages	•	•
Maximum and minimum: frequency	•	•

Table 5.4: Logs and Records

Logs and records	P5F30	P5M30
Sequence of event record	•	•
Disturbance record	•	•
Tripping context record	•	•
Relay maintenance data log	•	•
Security data log	•	•

Table 5.5: Monitoring Functions

Monitoring functions	ANSI code	P5F30	P5M30
Trip circuit supervision	74	1	1
Circuit breaker monitoring	—	1	1
Relay monitoring	—	•	•

PowerLogic Easergy P3 Standard

PowerLogic Easergy P3 Advanced

The PowerLogic Easergy P3 Range

Features and Benefits

- Simplified configuration with the new eSetup Easergy Pro setting tool
- Faster delivery with on-the-shelf availability of standard configurations
- Simpler operation and maintenance with the Schneider Electric Power Device App
- Native support for a wide range of communication protocols: IEC 61850, Modbus TCP/IP, Modbus RTU, DNP 3.0, SPA-bus, IEC 60870-5-101, IEC 60870-5-103, ProfibusDP, and DeviceNet
- Embedded arc protection
- Built-in virtual injection testing
- Compliant with international standards

Refer to catalog NRJCAT17764EN for the PowerLogic Easergy P3 Series.

[5] Function available if 12 DI / 4 DO board is present.

© 2022 Schneider Electric
All Rights Reserved
9/22/2022

PowerLogic Easergy P3 Characteristics

Table 5.6: PowerLogic Easergy P3 Characteristics

Characteristics		PowerLogic Easergy P3 Standard		PowerLogic Easergy P3 Advanced						
		P3U20	P3U30	P3F30	P3L30	P3M30	P3G30	P3T32	P3M32	P3G32
Application	Feeder	•	•	•	•	—	—	—	—	—
	Transformer	•	•	—	—	—	—	•	—	—
	Motor	•	•	—	—	•	—	—	•	—
	Generator	•	•	—	—	—	•	—	—	•
Measuring inputs	Phase current	1/5A CT (x3)[6]		1/5A CT (x3)[6]				1/5A CT (x6)		
	Residual current	1/5A CT or 0.2/1A CT		(1/5A+0.2/1A) CT				2 x (1/5A+0.2/1A) CT		
	Voltage	VT (x1)	VT (x4)	VT (x4)				VT (x4)		
Arc-flash sensor inputs		—	—	Loop sensor: 1 Point sensor: 2, 4 or 6[7][8]				Loop sensor: 1 Point sensor: 2, 4 or 6[7]		
Digital	Inputs	8/10	14/16	6 to 36				6 to 16		
	Outputs	5/8 + SF	11/8 + SF	10 to 21 + SF				10 to 13 + SF		
Analogue	Inputs	0 or 4[7]		0 or 4[7]				0 or 4[7]		
	Outputs	0 or 4[7]		0 or 4[7]				0 or 4[7]		
Temperature sensor inputs		0 or 8 or 12[7]		0 or 8 or 12[7]				0 or 8 or 12[7]		
Front port		USB type B		USB type B				USB type B		
Nominal power supply		24V dc or 24–48V dc or 48-230V ac/dc[9]		24 to 48V dc or 110-240V ac/dc				24 to 48V dc or 110-240V ac/dc		
Ambient temperature, in service		-40 to 60°C (-40 to 140°F)		-40 to 60°C (-40 to 140°F)				-40 to 60°C (-40 to 140°F)		
Communication										
Rear Ports RS232, IRIG/B, RS485, Ethernet		•		•				•		
Protocols	IEC61850 Ed1 & Ed2	•		•				•		
	IEC 60870-5-101 & 103	•		•				•		
	DNP3 over Ethernet	•		•				•		
	DNP3 serial	•		•				•		
	Modbus serial	•		•				•		
	Modbus over Ethernet	•		•				•		
	EtherNet IP [10]	•		•				•		
	DeviceNet	•		•				•		
	Profibus DP	•		•				•		
	SPAbus	•		•				•		
Redundancy protocols (RSTP/PRP)		•		•				•		
Control		4 objects 4 display	4 objects 8 display	5–6 objects 3–8 display				5–6 objects 3–8 display		
Others										
Logic (Matrix + Logic equation)		•		•				•		
Withdrawable CT connector with shorting		•		—				—		
Hardware dimensions (W/H/D)		171 x 176 x 214[11] mm / 6.73 x 6.93 x 8.43 in		264 x 177 x 208 mm / 10.39 x 6.97 x 8.19 in				264 x 177 x 208 mm / 10.39 x 6.97 x 8.19 in		

PowerLogic Easergy P3 Applications

Table 5.7: Protection Functions

Protection functions	ANSI code	Standard (P3U)		Advanced (P3x)						
		P3U20	P3U30	P3F30	P3L30	P3M30	P3M32	P3G30	P3G32	P3T32
Distance	21	—	—	—	1	—	—	—	—	—
Under-impedance	21G	—	—	—	—	—	—	2	2	—
Fault locator	21FL	—	1	1	1	—	—	—	—	—
Overfluxing	24	—	—	—	—	—	—	1	1	1
Synchro-check	25	—	2	2	2	2	2	2	2	2
Undervoltage	27	—	3	3	3	3	3	3	3	3
Positive sequence undervoltage	27P	—	—	—	—	—	—	2	2	—
Stator ground-fault detection	27TN/64G	—	—	—	—	—	—	1	1	—
Directional active underpower	32	—	2	2	2	2	2	2	2	2
Phase undercurrent	37	1	1	—	—	1	1	—	—	—
Temperature monitoring	38/49T	12 [12][13]	12 [12]	12 [12]	12 [12]	12 [12]	12 [12]	12 [12]	12 [12]	12 [12]
Loss of field	40	—	—	—	—	—	—	1	1	—
Under-reactance	21/40	—	—	—	—	—	—	2	2	—
Negative sequence overcurrent (motor, generator)	46	2	2	—	—	2	2	2	2	2
Current unbalance, broken conductor	46BC	—	—	1	1	—	—	—	—	—
Incorrect phase sequence	47	1	1	—	—	1	1	—	—	—
Excessive start time, locked rotor	48/51LR	1	1	—	—	1	1	—	—	—
Thermal overload	49	1	1	1	1	1	1	1	1	1
Phase overcurrent	50/51	3	3	3	3	3	3	3	3	3

[6] P3U30 and P3F30 relays only. Consult us for other models
[7] Depends on optional module
[8] P3L30 can have 1 loop or 2 point sensors only
[9] Check the available power supply range from the device's serial number label
[10] Consult us for availability
[11] 226 mm (8.90 in) with ring-lug connectors
[12] Using external RTD module
[13] 12 optional temperature sensors for P3U20

© 2022 Schneider Electric
All Rights Reserved
9/22/2022

Table 5.7 Protection Functions (cont'd.)

Protection functions	ANSI code	Standard (P3U)		Advanced (P3x)						
		P3U20	P3U30	P3F30	P3L30	P3M30	P3M32	P3G30	P3G32	P3T32
Ground fault overcurrent	50N/51N	5	5	5	5	5	5	5	5	5
Breaker failure	50BF	1	1	1	1	1	1	1	1	1
Switch On To Fault (SOTF)	50HS	1	1	1	1	1	1	1	1	1
Capacitor bank unbalance	51C	2	2	2	2	2	2	2	2	2
Voltage dependant overcurrent	51V	—	1	1	1	—	—	1	1	—
Overvoltage	59	—	3	3	3	3	3	3	3	3
Capacitor overvoltage	59C	—	—	1	1	—	—	—	—	—
Neutral voltage displacement	59N	3	3	2	2	2	2	2	2	2
CT supervision	60	1	1	1	1	1	1	1	2	2
VT supervision	60FL	—	1	1	1	1	1	1	1	1
Stator ground fault	64S	—	—	—	—	—	—	1	1	—
Frequent start inhibition	66	1	1	—	—	1	1	—	—	—
Directional phase overcurrent	67	—	4	4	4	4	4	4	4	4
Directional ground-fault o/c	67N	3	3	3	3	3	3	3	3	3
Transient intermittent	67NI	—	—	1	1	—	—	—	—	—
Magnetizing inrush detection	68F2	1	1	1	1	1	1	1	1	1
Fifth harmonic detection	68H5	1	1	1	1	1	1	1	1	1
Pole slip	78PS	—	—	—	—	—	—	1	1	—
Auto-recloser	79	—	—	5	5	—	—	—	—	—
Over or under frequency	81	—	2/2	2/2	2/2	2/2	2/2	2/2	2/2	2/2
Rate of change of frequency	81R	—	1	1	1	1	1	1	1	1
Under frequency	81U	—	2	2	2	2	2	2	2	2
Lockout	86	1	1	1	1	1	1	1	1	1
Line differential	87L	—	—	—	2	—	—	—	—	—
Machine differential	87M	—	—	—	—	—	2	—	2	—
Transformer differential	87T	—	—	—	—	—	—	—	—	2
Programmable stages	99	8	8	8	8	8	8	8	8	8
Arc-flash detection stages	—	—	—	8	8	8	8	8	8	8
Cold load pick-up	—	1	1	1	1	1	1	1	1	1
Programmable curves	—	3	3	3	3	3	3	3	3	3
Setting groups[14]	—	4	4	4	4	4	4	4	4	4

Table 5.8: Control Functions

Control functions	Standard (P3U)		Advanced (P3x)						
	P3U20	P3U30	P3F30	P3L30	P3M30	P3M32	P3G30	P3G32	P3T32
Switchgear control and monitoring	1/6	6	6	6	6	6	6	6	6
Switchgear monitoring only	2	2	2	2	2	2	2	2	2
Programmable switchgear interlocking	•	•	•	•	•	•	•	•	•
Local control on single-line diagram	•	•	•	•	•	•	•	•	•
Local control with O/I keys	•	•	•	•	•	•	•	•	•
Local/remote function	•	•	•	•	•	•	•	•	•
Function keys	2	2	2	2	2	2	2	2	2
Custom logic (logic equations)	•	•	•	•	•	•	•	•	•
Control with Smart application	•	•	•	•	•	•	•	•	•

Table 5.9: Measurement

Measurement	Standard (P3U)		Advanced (P3x)						
	P3U20	P3U30	P3F30	P3L30	P3M30	P3M32	P3G30	P3G32	P3T32
RMS current values	•	•	•	•	•	•[15]	•	•[15]	•[15]
RMS voltage values	•	•	•	•	•	•	•	•	•
RMS active, reactive and apparent power	—	•	•	•	•	•	•	•	•
Frequency	•	•	•	•	•	•	•	•	•
Fundamental frequency current values	•	•	•	•	•	•[15]	•	•[15]	•[15]
Fundamental frequency voltage values	—	•	•	•	•	•	•	•	•
Fundamental frequency active, reactive and apparent power values	—	•	•	•	•	•	•	•	•
Power factor	—	•	•	•	•	•	•	•	•
Energy values active and reactive	—	•	•	•	•	•	•	•	•
Energy transmitted with pulse outputs	—	•	•	•	•	•	•	•	•
Demand values: phase currents	•	•	•	•	•	•	•	•	•
Demand values: active, reactive, apparent power and power factor	—	•	•	•	•	•	•	•	•
Minimum and maximum demand values: phase currents	•	•	•	•	•	•	•	•	•
Minimum and maximum demand values: RMS phase currents	•	•	•	•	•	•	•	•	•
Minimum and maximum demand values: active, reactive, apparent power and power factor	—	•	•	•	•	•	•	•	•
Maximum demand values over the last 31 days and 12 months: active, reactive, apparent power	—	•	•	•	•	•	•	•	•
Minimum demand values over the last 31 days and 12 months: active, reactive power	—	•	•	•	•	•	•	•	•

[14] Not all protection functions have 4 setting groups. See details in the manual.
[15] Function available on both sets of CT inputs

© 2022 Schneider Electric
All Rights Reserved
9/22/2022

Table 5.9 Measurement (cont'd.)

Measurement	Standard (P3U)		Advanced (P3x)						
	P3U20	P3U30	P3F30	P3L30	P3M30	P3M32	P3G30	P3G32	P3T32
Maximum and minimum values: currents	•	•	•	•	•	•	•	•	•
Maximum and minimum values: voltages	•	•	•	•	•	•	•	•	•
Maximum and minimum values: frequency	•	•	•	•	•	•	•	•	•
Maximum and minimum values: active, reactive, apparent power and power factor	—	•	•	•	•	•	•	•	•
Harmonic values of phase current and THD	•	•	•	•	•	•*[16]*	•	•*[16]*	•*[16]*
Harmonic values of voltage and THD	—	•	•	•	•	•	•	•	•
Voltage sags and swells	—	•	•	•	•	•	•	•	•

Table 5.10: Logs and Records

Logs and Records	Standard (P3U)		Advanced (P3x)						
	P3U20	P3U30	P3F30	P3L30	P3M30	P3M32	P3G30	P3G32	P3T32
Sequence of event record	•	•	•	•	•	•	•	•	•
Disturbance record	•	•	•	•	•	•	•	•	•
Tripping context record	•	•	•	•	•	•	•	•	•

Table 5.11: Monitoring Functions

Monitoring functions	Standard (P3U)		Advanced (P3x)						
	P3U20	P3U30	P3F30	P3L30	P3M30	P3M32	P3G30	P3G32	P3T32
Trip circuit supervision (ANSI 74)	1	1	1	1	1	1	1	1	1
Circuit breaker monitoring	1	1	1	1	1	1	1	1	1
Relay monitoring	•	•	•	•	•	•	•	•	•

[16] Function available on both sets of CT inputs

© 2022 Schneider Electric
All Rights Reserved
9/22/2022

V125 Arc Flash Protection Unit

V125 Arc Flash Protection Solutions

Critical infrastructure depends heavily on an uninterrupted supply of electric power. Arc flash protection devices help accomplish this and are used to improve safety and mitigate equipment damage. Schneider Electric is the pioneer in the field of arc flash protection with close to 50,000 arc flash systems and 600,000 sensors in service worldwide. The V125 arc flash protection module can detect an arc flash event in as little as 2 milliseconds and send a control command to an interrupting device. It can accommodate up to four (4) point sensors and has a wide range 24 to 240 volt ac or dc power supply. It can be DIN rail mounted or door mounted and is easily set via DIP switches.

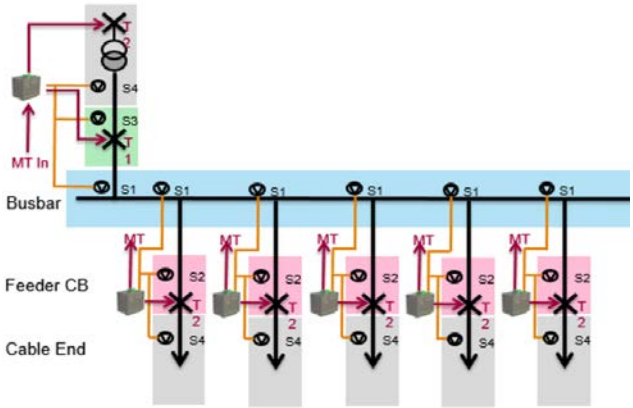

V125 Arc Flash Protection Unit with Optional REL52901 Door Mount Bracket

REL52901 Door Mount Bracket

Table 5.12: V125 Arc Flash Protection Units

Description	Cortec Type	Note	Catalog Number
Arc flash protection unit	V125		REL52900
Arc Sensor — Shielded	VA1DA-6S	Cable length 6 m	REL52806
Arc Sensor — Shielded	VA1DA-20S	Cable length 20 m	REL52803
Door mount bracket		For V125	REL52901
Surface Mounting Plate for Sensors	VYX001	Z-shaped	REL52828
Surface Mounting Plate for Sensors	VYX002	L-shaped	REL52829
I/O unit 3 phase current 1 trip contact, ring lug connections	VAM4CSE-RL		

VAM4CSERL
current module

Arc Flash point sensor
Type VA 1D

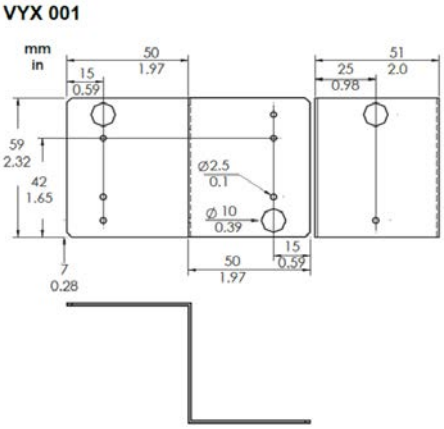

VYX 001
Surface Mounting Plate for sensors

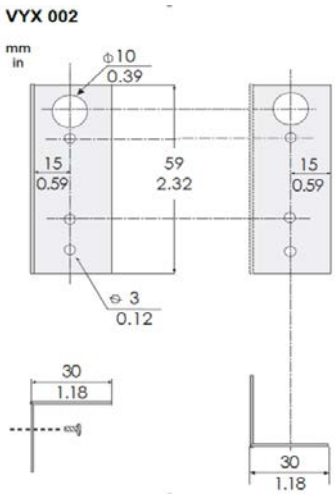

VYX 002
Surface Mounting Plate for sensors

© 2022 Schneider Electric
All Rights Reserved
9/22/2022

ECOFIT 50/51 Retrofit Relays

The Schneider Electric ECOFIT 50/51 single phase or ground time overcurrent relays are direct plug and protect replacements for many GE IAC or GE IFC electromechanical, GE DIAC and Basler BE1-50/51B replacements for GE IAC relays. The relays are self-powered from 50 or 60 Hz systems and are designed to be one to one replacements for existing electromechanical or digital relays. The relays are equipped with 31 built-in protection curves. ECOFIT 50/51 provides information that was not available in the E/M relays: (1) Twenty (20) overcurrent fault records time-tagged to the millisecond; (2) 200 events records time stamped to the millisecond; (3) Ten (10) Disturbance records up to 4 seconds per record at a sample rate of 32 samples per cycle. Plug and Protect reduces costs in installation time because it saves existing wiring and reduces engineering costs over other options. A 10-year warranty is standard.

Also refer to ECOFIT 50/51 on the www.se.us website.

Catalog Number Configuration

The Schneider Electric ECOFIT 50/51 is a direct replacement for many GE IAC relays.

The Schneider Electric ECOFIT 50/51 is a direct replacement for many GE IFC relays.

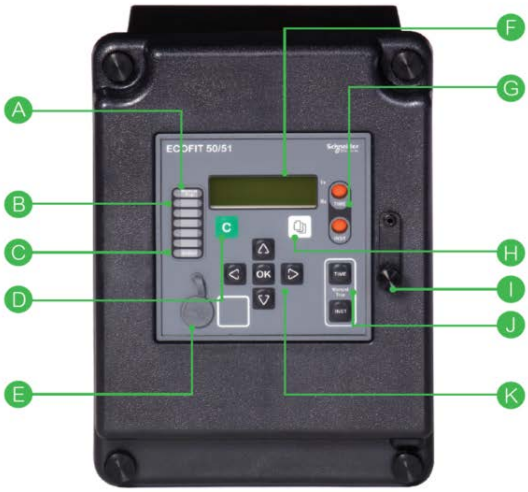

Function Reference	Control or Indicator
A	Manual Trip Mode LED
B	Programmable LEDs
C	Active LED
D	Clear Button
E	USB Port
F	HMI Display
G	Trip Indicators
H	Read button
I	Mechanical Reset
J	Manual Trips
K	Navigation Buttons

© 2022 Schneider Electric
All Rights Reserved
9/22/2022

The Sepam™ Range

Sepam protection relays are time-tested, high-performance devices that ensure dependability. This range of products was designed with a simple idea in mind: All users should be able to find a solution corresponding exactly to their needs with the right balance between performance, simplicity and cost. With Series 20, 40 and 80, the Sepam range does just this. This family of relays offers a solution for every application need, specifically targeting industrial installations. These multi-functional protection devices allow an easy and hassle-free startup with simple-to-use programming software. Sepam relays also comply with the latest communication protocols on the market, including IEC61850, DNP3 and Modbus. In addition, all relays within this range come with a standard 10-year warranty and conformal coating for protection against harsh environments.

Features and Benefits

- Compact devices with clearly defined connection terminals for easy installation
- Predefined control logic for circuit breaker control or contactor control
- Predefined control logic for Zone Selective Interlocking applications
- Predefined control logic for Automatic Transfer applications
- User-friendly software (SFT2841) with built-in manuals for every relay
- Support for offline programming
- Application-specific design ensuring appropriate protection for any given application
- Low power CT options for the use of relays on new installations where the load is low
- Field-upgradable technology to stay up-to-date on the latest hardware and software

Sepam Series 20 and 40

Sepam Series 20

The Series 20 consists of high-performing solutions suited for standard applications requiring current or voltage protection.

Applications Covered:

- Substation (feeder)
- Transformer
- Motor
- Busbar

Sepam Series 40

The Series 40 family of protection relays are designed for demanding applications requiring current, voltage and/or frequency protection.

- Substation (feeder)
- Transformer
- Motor
- Generator

Sepam Series 80

Sepam Series 80

The Series 80 relays are for custom applications requiring enhanced protection of electrical distribution networks.

Applications Covered:

- Substation (feeder)
- Transformer
- Motor
- Generator
- Busbar
- Capacitor

© 2022 Schneider Electric
All Rights Reserved
9/22/2022

Sepam Protection Configurations

Three relay series with increasing protection capabilities for six types of applications to provide all possible protection configurations

Table 5.13: Sepam 20, 40 and 80 Protection Functions

ANSI Device Number	Description	Sepam 20/40 Relay Models								Sepam 80 Relay Models								
		S24	M20	B22	S40	T40	T42	M41	G40	S84	M87	M88	T87	G87	G88	C86	B80	B83
12/14	Speed Switch		●					●			●	●		●	●			
21B	Underimpedance													●	●			
24	Volts/Hertz												●	●	●			
25	Synch Check									●			●	●	●		●	●
26	Thermostat					●	●				●	●	●		●			
27	Phase-to-phase Undervoltage			●	●	●	●	●	●	●	●	●	●	●	●	●	●	●
27D	Positive sequence Undervoltage			●				●		●	●	●	●	●	●	●	●	●
27R	Remnant Undervoltage			●				●		●	●	●	●	●	●	●	●	●
27S	Phase-to-neutral Undervoltage			●	●	●	●	●	●	●	●	●	●	●	●	●	●	●
27TN	Third Harmonic Neutral Undervoltage													●	●			
32P	Directional Power							●	●	●	●	●	●	●	●			
32Q/40/55	Directional Reactive Power							●	●		●	●		●	●			
37	Phase Undercurrent		●					●		●	●	●						
38	Bearing Temperature		●			●	●	●	●		●	●	●	●	●	●		
40	Loss of Excitation							●	●		●	●		●	●			
46	Negative Sequence Current/Unbalance	●	●		●	●	●	●	●	●	●	●	●	●	●	●	●	●
47	Negative Sequence Undervoltage			●	●	●	●	●	●	●	●	●	●	●	●	●	●	●
48	Excessive Starting Time		●					●			●	●						
49	Thermal Overload		●			●	●	●	●	●	●	●	●	●	●	●		
49T	RTD Monitoring		●			●	●	●	●		●	●	●	●	●	●		
50BF	Breaker Failure	●			●	●	●	●	●	●	●	●	●	●	●	●	●	●
50/27	Inadvertent Energization													●	●			
50	Instantaneous Phase Overcurrent	●	●		●	●	●	●	●	●	●	●	●	●	●	●	●	●
50G	Instantaneous Ground Overcurrent (Measured)		●		●	●	●	●	●	●	●	●	●	●	●	●	●	●
50N	Instantaneous Ground Overcurrent (Calculated)	●	●		●	●	●	●	●	●	●	●	●	●	●	●	●	●
50V	Voltage Restrained Instantaneous Overcurrent												●	●	●			
51	Time Phase Overcurrent	●	●		●	●	●	●	●	●	●	●	●	●	●	●	●	●
51C	Capacitor Bank Unbalance															●		
51G	Time Ground Overcurrent (Measured)		●		●	●	●	●	●	●	●	●	●	●	●	●	●	●
51N	Time Ground Overcurrent (Calculated)	●	●		●	●	●	●	●	●	●	●	●	●	●	●	●	●
51LR	Locked Rotor		●					●			●	●						
50V	Voltage Restrained Instantaneous Overcurrent								●									
51V	Voltage Restrained Time Overcurrent								●					●	●			
59	Phase-to-phase Overvoltage			●	●	●	●	●	●	●	●	●	●	●	●	●	●	●
59N	Neutral Voltage Displacement			●	●	●	●	●	●	●	●	●	●	●	●	●	●	●
63	Buchholz Pressure					●	●						●					
64G	100% Stator Ground Fault													●	●			
64REF	Restricted Ground Fault												●					
66	Starts per hour		●					●			●	●						
67	Directional Phase Overcurrent						●			●			●	●	●			
67N	Directional Ground Overcurrent						●			●	●	●		●	●			
78	Pole Slip										●	●		●	●			
79	Reclosing	●			●					●								
81H	Overfrequency			●	●	●	●	●	●	●	●	●	●	●	●	●	●	●
81L	Underfrequency			●	●	●	●	●	●	●	●	●	●	●	●	●	●	●
81R	Rate of Change of Frequency			●						●								
87M	Machine Differential										●			●				
87T	2 Winding Transformer Differential											●	●		●			

© 2022 Schneider Electric
All Rights Reserved
9/22/2022

Sepam™ 20/40/80 Characteristics

Table 5.14: Protection Configurations

Characteristics	Series 20	Series 40	Series 80
Logic inputs	0-10	0-10	0-42
Logic outputs	4-8	4-8	5-23
Temperature sensors	0-8	0-16	0-16
Channels	Current 3I + I0	Current 3I + I0	Current 2 x 3I + 2 x I0
	Voltage 3V + V0	Voltage 3V + V0	Voltage 2 x 3V + V0
	LPCT *[1]*	LPCT *[1]*	LPCT *[1]*
Communication Ports	1-2	1-2	2-4
	ModBus, IEC 103, DNP3, IEC 61850	ModBus, IEC 103, DNP3, IEC 61850	ModBus, IEC 103, DNP3, IEC 61850
	—	Redundancy	Redundancy
	—	—	Goose Messaging
Control	Matrix *[2]*	Matrix *[2]*	Matrix *[2]*
		Logic equation editor	Logic equation editor
	—	—	Logipam *[3]*
Other	—	—	Front memory cartridge with settings
	—	Backup 48 hours (capacitor)	Backup lithium battery *[4]*

Table 5.15: Metering Measurements (Basic — Sepam Series 20)

Metering	Measurement Range	Accuracy
Phase Current / Residual Current (Calculated)	0.1 to 40 In	±1%
Residual Current (Measured)	0.1 to 20 In0	±1%
Demand Current / Peak Demand Current	0.1 to 40 In	±1%
Phase-to-Phase Voltage / Phase-to-Neutral Voltage	0.05 to 1.2 Vnp	±1%
Residual Voltage	0.015 to 3 Vnp	±1%
Positive Sequence Voltage	0.05 to 1.2 Vnp	±5%
Frequency	50 ± 5 Hz or 60 ± 5 Hz	±0.05 Hz
Temperature	-22 to +392 °F (-30 to +200 °C)	±1 °C from -20 to +140 °C

Table 5.16: Metering Measurements (Standard — Sepam Series 40)

Metering	Measurement Range	Accuracy
Phase Current / Residual Current (Calculated)	0.1 to 40 In	±0.5%
Residual Current (Measured)	0.1 to 20 In0	±1%
Demand Current / Peak Demand Current	0.1 to 40 In	±0.5%
Phase-to-Phase Voltage / Phase-to-Neutral Voltage	0.06 to 1.2 Vnp	±0.5%
Residual Voltage	0.04 to 3 Vnp	±1%
Positive Sequence Voltage / Negative Sequence Voltage	0.05 to 1.2 Vnp	±2%
Frequency	25 to 65 Hz	±0.02 Hz
Active Power	0.015 Sn to 999 MW	±1%
Reactive Power	0.015 Sn to 999 MVar	±1%
Apparent Power	0.015 Sn to 999 MVA	±1%
Peak Demand Active Power	0.015 Sn to 999 MW	±1%
Peak Demand Reactive Power	0.015 Sn to 999 MVar	±1%
Power Factor	-1 to +1 (CAP/IND)	±1%
Calculated Active Energy	0 to 2.1x108 MWH	±1% ±1 digit
Calculated Reactive Energy	0 to 2.1x108 MVARH	±1% ±1 digit
Temperature	-22 to +392 °F (-30 to +200 °C	±1 °C from -20 to +140 °C

Table 5.17: Metering Measurements (Advanced — Sepam Series 80)

Metering	Measurement Range	Accuracy
Phase Current	0.02 to 40 In	±0.5%
Residual Current (Calculated)	0.005 to 40 In	±1%
Residual Current (Measured)	0.005 to 20 In0	±1%
Demand Current / Peak Demand Current	0.02 to 40 In	±0.5%
Phase-to-Phase Voltage / Phase-to-Neutral Voltage	0.05 to 1.2 Vnp	±0.5%
Residual Voltage / Neutral Point Voltage	0.015 to 3 Vnp	±1%
Positive Sequence Voltage / Negative Sequence Voltage	0.05 to 1.2 Vnp	±2%
Frequency	50 ± 5 Hz or 60 ± 5 Hz	±0.01 Hz
Active Power	0.008 Sn to 999 MW	±1%
Reactive Power	0.008 Sn to 999 MVar	±1%
Apparent Power	0.008 Sn to 999 MVA	±1%
Peak Demand Active Power	0.008 Sn to 999 MW	±1%
Peak Demand Reactive Power	0.008 Sn to 999 MVar	±1%
Power Factor	-1 to +1 (CAP/IND)	±1%
Calculated Active Energy	0 to 2.1x108 MWH	±1% ±1 digit
Calculated Reactive Energy	0 to 2.1x108 MVARH	±1% ±1 digit
Temperature	-22 to +392 °F (-30 to +200 °C)	±1 °C from -20 to +140 °C
Rotation Speed	0 to 7200 RPM	±1 RPM

[1] LPCT: low-power current transducer complying with standard IEC 60044-8.
[2] Control matrix for simple assignment of information from the protection, control and monitoring functions.
[3] Logipam ladder language (PC programming environment) to make full use of Sepam series 80 functions.
[4] Standard lithium battery 1/2 AA format 3.6 V front face exchangeable.

© 2022 Schneider Electric
All Rights Reserved
9/22/2022

Sepam™ 20 Configuration

Table 5.18: Sepam Series 20 Configuration

Model	Description	Relay Base Model	_	_	_	_	_	_	_	_
S24	S24 — Substation Relay	SQ1S24	Display	Current	Coms	I/O	RTDs	Analog Out	Logipam	Synch Check
B22	B22 — Busbar Relay	SQ1B22								
M20	M20 — Motor Relay	SQ1M20								
T24	T24 — Transformer Relay	SQ1T24								
	Advanced Display		A							
DSM303	Remote Advanced Display		R							
	Voltage Inputs Only (Required for Busbar Relays			0						
CCA634	1A/5A CT inputs			1						
CCA630	Alt. 1A/5A CT inputs (requires CSH120, 200 or 30)			2						
CCA670	Low Power CT (LPCT)			3						
MES114	10In/4Out, 24–48Vdc/120–250Vac				A					
MES114E	10In/4Out, 110–125Vdc/110Vac				B					
MES114F	10In/4Out, 220–250Vdc/220–220Vac				C					
ACE959	1 x RS485					1				
ACE969TP2	2 x RS485					2				
ACE969FO2	1 x RS485/ 1 x Fiber Optic					3				
	without (not available on Substation or Busbar relays)						A			
MET1482	8 Temp sensor inputs						B			
	without							0		
MSA141	1 x Analog 0–1mA, 0–10mA, 0–20mA, 4–20mA output							1		
	Without (80 Series Only)								A	
	Without (80 Series Only)									0

Table 5.19: Sepam Series 20 Typical Catalog Numbers

Catalog Numbers	Description
SQ1S24A1B1A0A0	Series 20 - Substation/Feeder Protection S24 (24-250Vdc & 120-240Vac), 1/5A CT inputs, 10In/8Out (110-125 Vdc, 110Vac), RS485
SQ1M20A1B1B0A0	Series 20 - Motor Protection M20 (24-250Vdc & 120-240Vac), 1/5A CT inputs, 10In/8Out (110-125 Vdc, 110Vac), 8 RTD's, RS485
SQ1T24A1B1A0A0	Series 20 - Transformer Protection T24 (24-250Vdc & 120-240Vac), 1/5A CT inputs, 10In/8Out (110-125 Vdc, 110Vac), RS485
SQ1B22A0B1A0A0	Series 20 - Voltage Protection B22 (24-250Vdc & 120-240Vac), Voltage Inputs ONLY, 10In/8Out (110-125 Vdc, 110Vac), RS485

Also refer to Sepam Series 20 on www.se.us.

Sepam 40 Configuration

Table 5.20: Sepam Series 40 Configuration

Model	Description	Relay Base Model	_	_	_	_	_	_	_	_
S42	S42 - Substation Relay	SQ1S42	Display	Current	Coms	I/O	RTDs	Analog Out	Logipam	Synch Check
G40	G40 - Generator Relay	SQ1G40								
M41	M41 - Motor Relay	SQ1M41								
T42	T42 - Transformer Relay	SQ1T42								
	Advanced Display		A							
DSM303	Remote Advanced Display		R							
CCA634	1A/5A CT inputs			1						
CCA630	Alt. 1A/5A CT inputs (requires CSH120, 200 or 30)			2						
CCA670	Low Power CT (LPCT)			3						
MES114	10In/4Out, 24-48Vdc/120-250Vac				A					
MES114E	10In/4Out, 110-125Vdc/110Vac*				B					
MES114F	10In/4Out, 220-250Vdc/220-240Vac				C					
ACE959	1 x RS485					1				
ACE969TP2	2 x RS485					2				
ACE969FO2	1 x RS485/ 1 x Fiber Optic					3				
ACE850TP	2 x Ethernet Ports (Copper, IEC61850/ModbusTCP)					5				
ACE850FO	2 x Ethernet Ports (Fiber, IEC61850/ModbusTCP)					6				
	without						A			
MET1482	8 Temp sensor inputs (One Module)						B			
2 x MET1482	16 Temp sensor inputs (Two Modules)						C			
	without							0		
MSA141	1 x Analog 0-1mA, 0-10mA, 0-20mA, 4-20mA output							1		
	without (80 Series Only)								A	
	without (80 Series Only)									0

Table 5.21: Sepam Series 40 Typical Catalog Numbers

Catalog Numbers	Description
SQ1S42A1B1A0A0	Series 40 Substation/Feeder Protection S42 (24-250Vdc & 120-240Vac), 1/5A CT inputs, 10In/8Out (110-125 Vdc, 110Vac), RS485
SQ1S42A1B5A0A0	Series 40 Substation/Feeder Protection S42 (24-250Vdc & 120-240Vac), 1/5A CT inputs, 10In/8Out (110-125 Vdc, 110Vac), 2 x RJ-45 Ethernet - Modbus/IEC61850
SQ1M41A1B1B0A0	Series 40 Motor Protection M41 (24-250Vdc & 120-240Vac), 1/5A CT inputs, 10In/8Out (110-125 Vdc, 110Vac), 8 RTD's, RS485
SQ1T42A1B1A0A0	Series 40 Transformer Protection T42 (24-250Vdc & 120-240Vac), 1/5A CT inputs, 10In/8Out (110-125 Vdc, 110Vac), RS485
SQ1G40A1B1A0A0	Series 40 Generator Protection G40 (24-250Vdc & 120-240Vac), 1/5A CT inputs, 10In/8Out (110-125 Vdc, 110Vac), RS485

Also refer to Sepam Series 40 on www.se.us.

© 2022 Schneider Electric
All Rights Reserved
9/22/2022

Sepam 80 Configuration

Table 5.22: Sepam Series 40 Configuration

Model	Description	Relay Base Model	_	_	_	_	_	_	_	_
S84	S84 - Substation Relay	SQ1S84	Display	Current	Coms	I/O	RTD's	Analog Out	Logipam	Synch Check
B80	B80 - Busbar Relay	SQ1B80								
B83	B83 - Busbar Relay	SQ1B83								
G87	G87 - Generator Relay	SQ1G87								
G88	G88 - Generator Relay	SQ1G88								
M87	M87 - Motor Relay	SQ1M87								
M88	M88 - Motor Relay	SQ1M88								
T87	T87 - Transformer Relay	SQ1T87								
C86	C86 - Capacitor Bank Relay	SQ1C86								
	Advanced Display		A							
MimicBus	MimicBus Display		P							
DSM303	Remote Advanced Display		C							
CCA634	1A/5A CT inputs			1						
CCA630	Alt. 1A/5A CT inputs (requires CSH120, 200 or 30)			2						
CCA671(80)	Low Power CT (LPCT)			3						
MES120	14In/6Out, 24-48Vdc				D					
2 x MES120	28In/12Out, 24-48Vdc				E					
3 x MES120	42In/18Out, 24-48Vdc				F					
MES120G	14In/6Out, 220-250Vdc				G					
2 x MES120G	28In/12Out, 220-250Vdc				H					
3 x MES120G	42In/18Out, 220-250Vdc				I					
MES120H	14In/6Out, 110-125Vdc				J					
2 x MES120H	28In/12Out, 110-125Vdc				K					
3 x MES120H	42In/18Out, 110-125Vdc				L					
ACE959	1 x RS485					1				
ACE969TP2	2 x RS485					2				
ACE969FO2	1 x RS485/ 1 x Fiber Optic					3				
ACE850TP	2 x Ethernet Ports (Copper, IEC61850/ModbusTCP)					5				
ACE850FO	2 x Ethernet Ports (Fiber, IEC61850/ModbusTCP)					6				
	without						A			
MET1482	8 Temp sensor inputs (One Module)						B			
2 x MET1482	16 Temp sensor inputs (Two Modules)						C			
	without							0		
MSA141	1 x Analog 0-1mA, 0-10mA, 0-20mA, 4-20mA output							1		
	without								A	
SFT080	Logipam Firmware								B	
	without									0
MCS025	Sync-Check Module (required for ANSI-25)									1

Table 5.23: Sepam Series 80 Typical Catalog Numbers

Catalog Numbers	Description
SQ1S84P1J5A0B0	Series 80 - Substation/Feeder Protection S84 (24-250Vdc), mimicBus Graphical Display, 1/5A CT inputs, 14In/11Out Digital Module (110-125Vdc/mid p.u.), 2 x RJ-45 ports (Modbus or IEC61850 with GOOSE), ladder logic firmware (PLC base).
SQ1B83P1J5A0B1	Series 80 - Busbar Protection B83 (24-250Vdc), mimicBus Graphical Display, 1/5A CT inputs, 14In/11Out Digital Module (110-125Vdc/mid p.u.), 2 x RJ-45 ports (Modbus or IEC61850 with GOOSE), ladder logic firmware (PLC base), Synchro-check
SQ1G87P1J5A0B0	Series 80 - Generator Differential Protection G87 (24-250Vdc), mimicBus Graphical Display, 1/5A CT inputs, 14In/11Out Digital Module (110-125Vdc/mid p. u.), 2 x RJ-45 ports (Modbus or IEC61850 with GOOSE), ladder logic firmware (PLC base).
SQ1M87P1J5B0B0	Series 80 - Motor Differential Protection M87 (24-250Vdc), mimicBus Graphical Display, 1/5A CT inputs, 14In/11Out Digital Module (110-125Vdc/mid p.u.), 8 RTD's, 2 x RJ-45 ports (Modbus or IEC61850 with GOOSE), ladder logic firmware (PLC base).
SQ1T87P1J5A0B0	Series 80 - Transformer Differential Protection T87 (24-250Vdc), mimicBus Graphical Display, 1/5A CT inputs, 14In/11Out Digital Module (110-125Vdc/mid p. u.), 2 x RJ-45 ports (Modbus or IEC61850 with GOOSE), ladder logic firmware (PLC base).

Also refer to Sepam Series 80 on www.se.us.

© 2022 Schneider Electric
All Rights Reserved
9/22/2022

S24/S42

S84

Sepam Substation / Feeder Applications

Substation/Feeder protection is broken into three sections Basic, Standard, and Advanced. The Basic protection is covered with our Sepam S24 protection relay and handles overcurrent (50/51) and ground faults (50G/51G or 50N/51N). The Standard protection is covered with the Sepam S42 protection relay and covers a host of current, voltage, and frequency protection elements. The Advanced protection is covered with the Sepam S84 and covers current, voltage, frequency, and synchro check protection functions.

Basic Protection Relay S24

Typical Catalog Number: **SQ1S24A1B1A0A0** Series 20 Substation/Feeder Protection S24 (24-250Vdc & 120-240Vac), 1/5A CT inputs, 10In/8Out (110-125 Vdc, 110Vac), RS485

Standard Protection Relay S42

Typical Catalog Number: **SQ1S42A1B1A0A0** Series 40 - Substation/Feeder Protection S42 (24-250Vdc & 120-240Vac), 1/5A CT inputs, 10In/8Out (110-125 Vdc, 110Vac), RS485

Advanced Protection Relay S84

Typical Catalog Number: **SQ1S84P1J5A0B0** Series 80 - Substation/Feeder Protection S84 (24-250Vdc), mimicBus Graphical Display, 1/5A CT inputs, 14In/11Out Digital Module (110-125Vdc/mid p.u.), 2 x RJ-45 ports (Modbus or IEC61850 with GOOSE), ladder logic firmware (PLC base).

Table 5.24: Features

Feature		Basic Protection Relay S24 Sepam 20 Series	Standard Protection Relay S42 Sepam 40 Series	Advanced Protection Relay S84 Sepam 80 Series
Current Protection		•	•	•
Built in CB Control		•	•	•
Native Zone Selective Interlocking		•	•	•
Waveform Captures		•	•	•
Event Records		•	•	•
Voltage Protection			•	•
Frequency Protection			•	•
Field Expandable Communications			•	•
Synchro-check Protection (optional)				•
Native Automatic Throw over Scheme				•
Field expandable I/O				•
Ladder Logic PLC custom programming (optional)				•
Mimic-bus graphical display (optional)				•
Onboard data logging				•
Communications options	Modbus RTU	•	•	•
	DPN	•	•	•
	Modbus TCP/IP		•	•
	IEC61850–MMS		•	•
	IEC61850–MMS + GOOSE			•

Table 5.25: Functions

ANSI Device Number	Description	Basic Protection Relay S24 Sepam 20 Series	Standard Protection Relay S42 Sepam 40 Series	Advanced Protection Relay S84 Sepam 80 Series
25	Synch Check			•
27	Phase-to-phase undervoltage		•	•
27D	Positive sequence undervoltage			•
27R	Remnant undervoltage			•
27S	Phase-to-neutral undervoltage		•	•
32P	Directional Power		•	•
37	Phase Undercurrent			•
46	Negative Sequence Current/Unbalance	•	•	•
47	Negative Sequence undervoltage		•	•
49	Thermal Overload			•
50	Instantaneous Phase Overcurrent	•	•	•
50BF	Breaker Failure	•	•	•
50G	Instantaneous Ground Overcurrent (Measured)		•	•
50N	Instantaneous Ground Overcurrent (Calculated)	•	•	•
51	Time Phase Overcurrent	•	•	•
51G	Time Ground Overcurrent(Measured)		•	•
51N	Time Ground Overcurrent(Calculated)	•	•	•
59	Phase-to-phase overvoltage		•	•
59N	Neutral Voltage Displacement		•	•
67	Directional Phase Overcurrent		•	•
67N	Directional Ground Overcurrent		•	•
79	Reclosing	•	•	•
81H	Overfrequency		•	•
81L	Underfrequency		•	•
81R	Rate of Change of Frequency			•

© 2022 Schneider Electric
All Rights Reserved
9/22/2022

M20/M41

M87/M88

Sepam Motor Applications

Motor protection is broken into three sections Basic, Standard, and Advanced. The Basic protection is covered with our Sepam M20 protection relay and handles overcurrent (50/51) and ground faults (50G/51G or 50N/51N). The Standard protection is covered with the Sepam M41 protection relay and covers a host of current, voltage, and frequency protection elements. The Advanced protection is covered with the Sepam M87/M88 and covers current, voltage, frequency, and differential protection functions.

Basic Protection Relay (M20 - Sepam 20 Series)

Typical Part Number: **SQ1M20A1B1A0A0** Series 20 - Motor Protection M20 (24-250Vdc & 120-240Vac), 1/5A CT inputs, 10In/8Out (110-125 Vdc, 110Vac), RS485

Standard Protection Relay (M41 – Sepam 40 Series)

Typical Part Number: **SQ1M41A1B1A0A0** Series 40 - Motor Protection M41 (24-250Vdc & 120-240Vac), 1/5A CT inputs, 10In/8Out (110-125 Vdc, 110Vac), RS485

Advanced Protection Relay (M87/M88 – Sepam 80 Series)

Typical Part Number: **SQ1M87P1J5A0B0** Series 80 - Motor Protection S84 (24-250Vdc), mimicBus Graphical Display, 1/5A CT inputs, 14In/11Out Digital Module (110-125Vdc/mid p.u.), 2 x RJ-45 ports (Modbus or IEC61850 with GOOSE), ladder logic firmware (PLC base).

Table 5.26: Features

Feature		M20	M41	M87/M88
Current Protection		•	•	•
Built in CB Control		•	•	•
Native Zone Selective Interlocking		•	•	•
Waveform Captures		•	•	•
Event Records		•	•	•
Voltage Protection			•	•
Frequency Protection			•	•
Field Expandable Communications			•	•
Synchro-check Protection (optional)				•
Native Automatic Throw over Scheme				•
Field expandable I/O				•
Ladder Logic PLC custom programming (optional)				•
Mimic-bus graphical display (optional)				•
Onboard data logging				•
Native Load Shedding and Motor Restart				•
Ability to incorporate a transformer into the same zone of protection (M88 only)				•
Built in Motor start and trending reports				•
Communications options	Modbus RTU	•	•	•
	DPN	•	•	•
	Modbus TCP/IP		•	•
	IEC61850–MMS		•	•
	IEC61850–MMS + GOOSE			•

Table 5.27: Functions

ANSI Device Number	Description	M20	M41	M87	M88
12/14	Speed Switch	•	•	•	•
26	Thermostat			•	•
27	Phase-to-phase undervoltage		•	•	•
27D	Positive sequence undervoltage		•	•	•
27R	Remnant Undervoltage		•	•	•
27S	Phase-to-neutral undervoltage		•	•	•
32P	Directional Power		•	•	•
32Q/40/55	Directional Reactive Power		•	•	•
37	Phase Undercurrent	•	•	•	•
38	Bearing Temperature	•	•	•	•
40	Loss of Excitation		•	•	•
46	Negative Sequence Current/Unbalance	•	•	•	•
47	Negative Sequence undervoltage		•	•	•
48	Excessive Starting Time	•	•	•	•
49	Thermal Overload	•	•	•	•
49T	RTD Monitoring	•	•	•	•
50BF	Breaker Failure		•	•	•
50	Instantaneous Phase Overcurrent	•	•	•	•
50G	Instantaneous Ground Overcurrent(Measured)	•	•	•	•
50N	Instantaneous Ground Overcurrent(Calculated)	•	•	•	•
51	Time Phase Overcurrent	•	•	•	•
51G	Time Ground Overcurrent(Measured)	•	•	•	•
51N	Time Ground Overcurrent(Calculated)	•	•	•	•
51LR	Locked Rotor	•	•	•	•
59	Phase-to-phase overvoltage		•	•	•
59N	Neutral Voltage Displacement		•	•	•
66	Starts per hour	•	•	•	•
67N	Directional Ground Overcurrent			•	•
78	Pole Slip			•	•
81H	Overfrequency		•	•	•
81L	Underfrequency		•	•	•
87M	Machine Differential			•	
87T	2 Winding Transformer Differential				•

© 2022 Schneider Electric
All Rights Reserved
9/22/2022

T24/T42

T87

Sepam Transformer Applications

Transformer protection is broken into three sections Basic, Standard, and Advanced. The Basic protection is covered with our Sepam T24 protection relay and handles overcurrent (50/51) and ground faults (50G/51G or 50N/51N). The Standard protection is covered with the Sepam T42 protection relay and covers a host of current, voltage, and frequency protection elements. The Advanced protection is covered with the Sepam T87 and covers current, voltage, frequency, differential, and synchro check protection functions.

Basic Protection Relay (T24 - Sepam 20 Series)

Typical Part Number: **SQ1T24A1B1A0A0** Series 20 - Transformer Protection T24 (24-250Vdc & 120-240Vac), 1/5A CT inputs, 10In/8Out (110-125 Vdc, 110Vac), RS485

Standard Protection Relay (T42 – Sepam 40 Series)

Typical Part Number: **SQ1T42A1B1A0A0** Series 40 - Transformer Protection T42 (24-250Vdc & 120-240Vac), 1/5A CT inputs, 10In/8Out (110-125 Vdc, 110Vac), RS485

Advanced Protection Relay (T87 – Sepam 80 Series)

Typical Part Number: **SQ1T87P1J5A0B0** Series 80 - Transformer Protection S84 (24-250Vdc), mimicBus Graphical Display, 1/5A CT inputs, 14In/11Out Digital Module (110-125Vdc/mid p.u.), 2 x RJ-45 ports (Modbus or IEC61850 with GOOSE), ladder logic firmware (PLC base).

Table 5.28: Features

Feature		T24	T42	T87
Current Protection		•	•	•
Built in CB Control		•	•	•
Native Zone Selective Interlocking		•	•	•
Waveform Captures		•	•	•
Event Records		•	•	•
Voltage Protection			•	•
Frequency Protection			•	•
Field Expandable Communications			•	•
Synchro-check Protection (optional)				•
Native Automatic Throw over Scheme				•
Field expandable I/O				•
Ladder Logic PLC custom programming (optional)				•
Mimic-bus graphical display (optional)				•
Onboard data logging				•
Communications options	Modbus RTU	•	•	•
	DPN	•	•	•
	Modbus TCP/IP		•	•
	IEC61850–MMS		•	•
	IEC61850–MMS + GOOSE			•

Table 5.29: Functions

ANSI Device Number	Description	T24	T42	T87
24	Volts/Hertz			•
25	Synch Check			•
26	Thermostat	•	•	•
27	Phase-to-phase undervoltage		•	•
27D	Positive sequence undervoltage			•
27R	Remnant Undervoltage			•
27S	Phase-to-neutral undervoltage		•	•
32P	Directional Power			•
38	Bearing Temperature	•	•	•
46	Negative Sequence Current/Unbalance	•	•	•
47	Negative Sequence undervoltage		•	•
49	Thermal Overload	•	•	•
49T	RTD Monitoring	•	•	•
50BF	Breaker Failure	•	•	•
50	Instantaneous Phase Overcurrent	•	•	•
50G	Instantaneous Ground Overcurrent (Measured)	•	•	•
50N	Instantaneous Ground Overcurrent (Calculated)	•	•	•
50V	Voltage Restrained Instantaneous overcurrent			•
51	Time Phase Overcurrent	•	•	•
51G	Time Ground Overcurrent (Measured)	•	•	•
51N	Time Ground Overcurrent (Calculated)	•	•	•
59	Phase-to-phase overvoltage		•	•
59N	Neutral Voltage Displacement		•	•
63	Buchholz Pressure	•	•	•
64REF	Restricted Ground Fault			•
67N	Directional Ground Overcurrent		•	
67	Directional Phase Overcurrent		•	•
81H	Overfrequency		•	•
81L	Underfrequency		•	•
87T	2 Winding Transformer Differential			•

© 2022 Schneider Electric
All Rights Reserved
9/22/2022

G40

G87/G88

Sepam Generator Applications

Generator protection is broken into two sections Standard and Advanced. The Standard protection is covered with the Sepam G40 protection relay and covers a host of current, voltage, and frequency protection elements. The Advanced protection is covered with the Sepam G87/G88 and covers current, voltage, frequency, differential, and synchro check protection functions.

Standard Protection Relay (G40 – Sepam 40 Series)

Typical Part Number: **SQ1G40A1B1A0A0** Series 40 - Generator Protection G40 (24-250Vdc & 120-240Vac), 1/5A CT inputs, 10In/8Out (110-125 Vdc, 110Vac), RS485

Advanced Protection Relay (G87/G88 – Sepam 80 Series)

Typical Part Number: **SQ1G87P1J5A0B0** Series 80 – Generator Protection G87 (24-250Vdc), mimicBus Graphical Display, 1/5A CT inputs, 14In/11Out Digital Module (110-125Vdc/mid p.u.), 2 x RJ-45 ports (Modbus or IEC61850 with GOOSE), ladder logic firmware (PLC base).

Table 5.30: Features

Feature		G40	G87	G88
Current Protection		•	•	•
Built in CB Control		•	•	•
Native Zone Selective Interlocking		•	•	•
Waveform Captures		•	•	•
Event Records		•	•	•
Voltage Protection		•	•	•
Frequency Protection		•	•	•
Field Expandable Communications		•	•	•
Synchro-check Protection (optional)			•	•
Native Automatic Throw over Scheme			•	•
Field expandable I/O			•	•
Ladder Logic PLC custom programming (optional)			•	•
Mimic-bus graphical display (optional)			•	•
Onboard data logging			•	•
Native Load Shedding and Motor Restart			•	•
Ability to incorporate a transformer into the same zone of protection (M88 only)			•	•
Built in Motor start and trending reports			•	•
Communications options	Modbus RTU	•	•	•
	DPN	•	•	•
	Modbus TCP/IP	•	•	•
	IEC61850–MMS	•	•	•
	IEC61850–MMS + GOOSE		•	•

Table 5.31: Functions

ANSI Device Number	Description	G40	G87	G88
12/14	Speed Switch		•	•
21B	Underimpedance		•	•
24	Volts/Hertz		•	•
25	Synch Check		•	•
27	Phase-to-phase undervoltage	•	•	•
27D	Positive sequence undervoltage		•	•
27R	Remnant Undervoltage		•	•
27S	Phase-to-neutral undervoltage	•	•	•
27TN	Third Harmonic Neutral Undervoltage		•	•
32P	Directional Power	•	•	•
32Q/40/55	Directional Reactive Power	•	•	•
38	Bearing Temperature	•	•	•
40	Loss of Excitation	•	•	•
46	Negative Sequence Current/Unbalance	•	•	•
47	Negative Sequence undervoltage	•	•	•
49	Thermal Overload	•	•	•
49T	RTD Monitoring	•	•	•
50/27	Inadvertent energization		•	•
50BF	Breaker Failure	•	•	•
50	Instantaneous Phase Overcurrent	•	•	•
50G	Instantaneous Ground Overcurrent(Measured)	•	•	•
50N	Instantaneous Ground Overcurrent(Calculated)	•	•	•
50V	Voltage Restrained Instantaneous overcurrent	•	•	•
51	Time Phase Overcurrent	•	•	•
51G	Time Ground Overcurrent(Measured)	•	•	•
51N	Time Ground Overcurrent(Calculated)	•	•	•
51V	Voltage Restrained Time Overcurrent	•	•	•
59	Phase-to-phase overvoltage	•	•	•
59N	Neutral Voltage Displacement	•	•	•
66	Starts per hour	•		
64G	100% Stator Ground Fault		•	•
67	Directional Phase Overcurrent		•	•
67N	Directional Ground Overcurrent		•	•
78	Pole Slip		•	•
81H	Overfrequency	•	•	•
81L	Underfrequency	•	•	•
87M	Machine Differential		•	
87T	2 Winding Transformer Differential			•

© 2022 Schneider Electric
All Rights Reserved
9/22/2022

B22

B80/B83

Sepam Busbar Applications

Busbar protection is broken into two sections Basic and Advanced. The Basic protection is covered with our Sepam B22 protection relay and handles voltage and frequency protectoin. The Advanced protection is covered with the Sepam B80/B83 and covers current, voltage, frequency, and synchro check protection functions.

Basic Protection Relay (B22 - Sepam 20 Series)

Typical Part Number: **SQ1G40A1B1A0A0** Series 20 - Busbar Protection B22 (24-250Vdc & 120-240Vac), VT inputs, 10In/8Out (110-125 Vdc, 110Vac), RS485

Advanced Protection Relay (B80/B83 – Sepam 80 Series)

Typical Part Number: **SQ1B83P1J5A0B0** Series 80 - Busbar Protection S84 (24-250Vdc), mimicBus Graphical Display, 1/5A CT inputs, 14In/11Out Digital Module (110-125Vdc/mid p.u.), 2 x RJ-45 ports (Modbus or IEC61850 with GOOSE), ladder logic firmware (PLC base).

Table 5.32: Features

Feature		B22	B80	B83
Current Protection			•	•
Built in CB Control		•	•	•
Native Zone Selective Interlocking		•	•	•
Waveform Captures		•	•	•
Event Records		•	•	•
Voltage Protection (2 sets of VTs on B83)		•	•	•
Frequency Protection		•	•	•
Field Expandable Communications			•	•
Synchro-check Protection (optional)			•	•
Native Automatic Throw over Scheme			•	•
Field expandable I/O			•	•
Ladder Logic PLC custom programming (optional)			•	•
Mimic-bus graphical display (optional)			•	•
Onboard data logging			•	•
Communications options	Modbus RTU	•	•	•
	DPN	•	•	•
	Modbus TCP/IP		•	•
	IEC61850–MMS + GOOSE		•	•

Table 5.33: Functions

ANSI Device Number	Description	B22	B80	B83
25	Synch Check		•	•
27	Phase-to-phase undervoltage	•	•	•
27D	Positive sequence undervoltage	•	•	•
27R	Remnant Undervoltage	•	•	•
27S	Phase-to-neutral undervoltage	•	•	•
46	Negative Sequence Current/Unbalance		•	•
47	Negative Sequence undervoltage	•	•	•
50BF	Breaker Failure		•	•
50	Instantaneous Phase Overcurrent		•	•
50G	Instantaneous Ground Overcurrent(Measured)		•	•
50N	Instantaneous Ground Overcurrent(Calculated)		•	•
51	Time Phase Overcurrent		•	•
51G	Time Ground Overcurrent(Measured)		•	•
51N	Time Ground Overcurrent(Calculated)		•	•
59	Phase-to-phase overvoltage	•	•	•
59N	Neutral Voltage Displacement	•	•	•
81H	Overfrequency	•	•	•
81L	Underfrequency	•	•	•
81R	Rate of Change of Frequency	•		

© 2022 Schneider Electric
All Rights Reserved
9/22/2022

C86

Sepam Capacitor Applications

Busbar protection is broken into two sections Basic and Advanced. The Basic protection is covered with our Sepam B22 protection relay and handles voltage and frequency protectoin. The Advanced protection is covered with the Sepam B80/B83 and covers current, voltage, frequency, and synchro check protection functions. .

Advanced Protection Relay (C86 – Sepam 80 Series)

Typical Part Number: **SQ1C86P1J5A0B0** Series 80 - Transformer Protection S84 (24-250Vdc), mimicBus Graphical Display, 1/5A CT inputs, 14In/11Out Digital Module (110-125Vdc/mid p.u.), 2 x RJ-45 ports (Modbus or IEC61850 with GOOSE), ladder logic firmware (PLC base).

Table 5.34: Features

Feature		C86
Current Protection		•
Built in CB Control		•
Built in protection and control for Capacitors, up to 4 steps		•
Native Zone Selective Interlocking		•
Waveform Captures		•
Event Records		•
Voltage Protection		•
Frequency Protection		•
Field Expandable Communications		•
Native Automatic Throw over Scheme		•
Field expandable I/O		•
Ladder Logic PLC custom programming (optional)		•
Mimic-bus graphical display (optional)		•
Onboard data logging		•
Communications options	Modbus RTU	•
	DPN	•
	Modbus TCP/IP	•
	IEC61850–MMS + GOOSE	•

ANSI Device Number	Description	C86
27	Phase-to-phase undervoltage	•
27D	Positive sequence undervoltage	•
27R	Remnant Undervoltage	•
27S	Phase-to-neutral undervoltage	•
38	Bearing Temperature	•
46	Negative Sequence Current/Unbalance	•
47	Negative Sequence undervoltage	•
49	Thermal Overload	•
49T	RTD Monitoring	•
50BF	Breaker Failure	•
50	Instantaneous Phase Overcurrent	•
50G	Instantaneous Ground Overcurrent (Measured)	•
50N	Instantaneous Ground Overcurrent (Calculated)	•
51	Time Phase Overcurrent	•
51C	Capacitor Bank Unbalance	•
51G	Time Ground Overcurrent (Measured)	•
51N	Time Ground Overcurrent (Calculated)	•
59	Phase-to-phase overvoltage	•
59N	Neutral Voltage Displacement	•
81H	Overfrequency	•
81L	Underfrequency	•

© 2022 Schneider Electric
All Rights Reserved
9/22/2022

The MiCOM Range

The MiCOM protection relay range provides capability for a wide variety of protection, control, measurement, monitoring, and communication. MiCOM protection relays offer scalable levels of functionality and hardware options to best suit your protection requirements and allows you to choose the most cost-effective solution for your application. The versatile hardware and common relay management software (Easergy Studio) allows simple configuration and installation in different applications.

Features and Benefits

- Advanced communications capabilities including IEC61850 with PRP and HSR
- Self-powered options on the MiCOM 10 series
- Native cyber security including IEEE 1686 and NERC-CIP
- Wide range of frequency protections including 16.5, 16.67, 25, 50, and 60Hz
- User-friendly programmable scheme logic for custom programming
- Application-specific design ensuring appropriate protection for any given application

MiCOM Characteristics

Table 5.35: MiCOM Series Characteristics

Series	MiCOM 10 Series	MiCOM 20 Series	MiCOM 30 Series	MiCOM 40 Series
Description	The MiCOM 10 series provides for self-powered protection.	The MiCOM 20 series provides for basic current based protections.	The MiCOM 30 series provides for a full range of protection features and is focused on Utility and Railway applications.	The MiCOM 40 series fulfils the protection requirements for a wide range of Utility and industrial applications.
Applications Covered				
Substation (Feeder)	•	•	•	•
Motor		•	•	•
Transformer			•	•
Distance			•	•
Line Differential			•	•
Railway			•	
Busbar				•
Mesh breaker arrangements				•
Generator				•
Characteristics				
Frequency 50/60 Hz			•	•
Logic inputs	max 8	max 12	max 82	max 64
Opto inputs			max 82	max 64
Output contacts			max 48	max 60
Logic outputs	max 8	max 8	max 48	max 60
Continuous carry			5 A / 8 A / 10 A	10 A
Short duration current			30 A for 0.5 (3s)	30 A for 3s
LED indication (programmable)			23 (19)	22 (18)
Settings groups			4	4
High break contacts	NA	NA	max 16	max 8
Function keys / hot keys	NA	NA	6	10 / 2
Fault records	20	25	8	15
Event records	200	250	1000	250–512
Disturbance records	5	5	16.4s (max 8 rec.)	75s (max 10. s/rec.)
Programmable logic	NA	Flexible Logic	Fully programmable	Graphical / Fully programmable
IRIG-B	NA	Optional	Optional	Optional
LCD display			Alphanumeric / Graphical	Alphanumeric
Front port			EIA(RS) 232	EIA(RS) 232
Rear port			Yes / Optional	Yes / Optional
Counter			EIA(RS)485 or fiber	K-Bus / EIA(RS)485 or fiber
Modbus			EIA(RS)485 or fiber	EIA(RS)485 or fiber
IEC 60870–5–103			EIA(RS)485 or fiber	EIA(RS)485 or fiber
IEC 60870–5–101			EIA(RS)485 or fiber	EIA(RS)485 or fiber
DNP3.0			EIA(RS)485 or fiber	EIA(RS)485 or Ethernet (RJ45, fiber)
IEC 61850			Wire RJ45 or fiber	Wire RJ45 or fiber
Terminals			Pin or Ring	Ring
Analog I/O	NA	max 0/2	1/2	4/4
Temperature sensors	NA	max 10	max 10	max 10
Communication Ports	1	1	1-4	1-4
	ModBus, IEC 103, DNP3	ModBus, IEC 103, DNP3	ModBus, IEC 103, DNP3, IEC 61850	ModBus, IEC 103, DNP3, IEC 61850
	—	—	Redundancy	Redundancy
	—	—	Goose Messaging	Goose Messaging

© 2022 Schneider Electric
All Rights Reserved
9/22/2022

Table 5.36: Feeder Management and Overcurrent Relays

Easergy MiCOM series	10			20							30		40			
model	P111	P115	P116	P120	P121	P122	P123	P125	P126	P127	P132	P139	P141	P142	P143	P145
Case size				20TE	20TE	20TE	20TE	30TE	30TE	30TE	24, 40 or 84TE	40 or 84TE	40TE	40TE	60 or 80TE	60TE
CT Inputs	4	4	4	1	4	4	4	1	4	4	4	4	5	5	5	5
VT Inputs								1	1	3	4 or 5	4 or 5	3	3	3 or 4	3 or 4
Opto Inputs (max)	8	2	6	2	2	3	5	4	7	12	70	70	8	16	32	32
Output Contacts (max)	8	4	7	4	4	6	8	6	8	8	32	28	8	15	30	32
High Break Contacts (max)											16	16		4	8	8
RTDs (max)											10	10				
Analogue Input / Output (max)											1/2	1/2				
Function Keys / Hotkeys											•	•	•	•	•	•
Bay Control and Monitoring											Mimic	Graphical				
Interlocking Logic											•	•				

Table 5.37: Transformer Protection Relays

Easergy MiCOM series / model	30 / P631	30 / P632	30 / P633	30 / P634	40 / P642	40 / P643	40 / P645
Case size	24 or 40TE	40 or 84TE	40 or 84TE	40 or 84TE	40TE	60TE	80TE
CT Inputs	6	8	12	15	8	12	18
VT Inputs		1	1	1	1 or 2	1 or 4	1 or 4
Opto Inputs (max)	4	34	40	34	12	24	24
Output Contacts (max)	14	22	30	22	12	24	24
Analogue Input / Output (max)		1/2	1/2	1/2	4/4	4/4	4/4
High Break Contacts	4	4	4	4	4	4	8
RTDs (option)		1	1	1	10	10	10
Function keys / Hotkeys	•	•	•	•		•	•
Bay Control & Monitoring		Mimic	Mimic				
Interlocking Logic		•	•				

Table 5.38: Generator Management Relays

Easergy MiCOM series / model	40 / P342	40 / P343	40 / P344	40 / P345
Case size	40 or 60TE	60 or 80TE	80TE	80TE
CT Inputs	5	8	8	9
VT Inputs	4	4	5	6
Opto Inputs (max) / Output Contacts (max)	24	32	32	32
High Break Contacts	4	8	8	8
RTDs (option)	10	10	10	10
Analogue Input / Output (max)	4/4	4/4	4/4	4/4
Function keys / Hotkeys	•	•	•	•
Interlocking Logic	•	•	•	•

Table 5.39: Busbar Protection Relays

Easergy MiCOM series / model	40 / P741* (CU)	40 / P742* (PU)	40 / P743* (PU)	40 / P746
Case size	80TE	40TE	60TE	80TE
CT Inputs		4	4	18/21
VT Inputs				3/0
Opto Inputs (max)	8	16	24	40
Output Contacts (max)	8	8	21	32
Function keys / Hotkeys	•		•	•

Table 5.40: Rail Protection Relays

Easergy MiCOM series / model	30 / P138	30 / P436	30 / P438	30 / P638
Case size	40 or 84TE	40 or 84TE	40 or 84TE	84TE
CT Inputs	2	3	3	5
VT Inputs	1	2	2	1
Opto Inputs (max)	22	34	28	38
Output Contacts (max)	48	46	46	64
RTDs (option)	1	1	1	1
Analogue Input / Output (max)	1/2	1/2	1/2	1/2
Function keys / Hotkeys	•	•	•	•

© 2022 Schneider Electric
All Rights Reserved
9/22/2022

MiCOM 10 Series
P11x Self-Powered or Dual Powered
P115 and P116

MiCOM Self-Powered Applications

Self-powered applications are special and require specific hardware to handle the necessary protection of equipment. Schneider Electric offers the MiCOM P116 relay for this application. The P116 provides a number of advantages including dual power options, communications, withdrawable case, and electromagnetic flag indicators.

- Current Protection
- Electromagnetic flag indicators
- Withdrawable case
- Waveform captures
- Event records
- Communications options:
  - Modbus RTU
  - Event records

Table 5.41: Functions

ANSI Device Number	Description	P116
37	Undercurrent	•
46	Negative Sequence Current/Unbalance	•
46BC	Broken conductor detection	•
50BF	Breaker Failure	•
50	Instantaneous Phase Overcurrent	•
50N	Instantaneous Ground Overcurrent(Calculated)	•
51	Time Phase Overcurrent	•
51N	Time Ground Overcurrent(Calculated)	•
50HS	Switch on to fault	•
79	Reclosing	•

Table 5.42: Typical Catalog Number

Catalog Number	Description
P116A1N6N25115111W	Series 10 - Substation/Feeder Protection, Dual powered P116 (CT powered and 60-250Vdc & 60-240Vac), 5A CT inputs, 6In/7Out (24-250 Vdc, 24-240Vac), RS485, 5 electromagnetic flags, withdrawable case

MiCOM Substation / Feeder Applications

The MiCOM range of relays offers varying levels of functionality and hardware options to best suit the protection requirements and allows the customer to choose the most cost effective solution for their application.

The versatile hardware allows for application in many installations and a common relay management software (MiCOM S1 Studio) makes for easy configuration and application.

MiCOM P11x

MiCOM P12x

Basic Feeder Protection Relays — MiCOM 10 and 20 Series

The 10 and 20 series hardware platforms are the building blocks of the MiCOM protection relay range providing the capability for a wide variety of protection, control, measurement, monitoring and communication functions.

The MiCOM P11x relays are suitable for all the applications where overcurrent and/or ground fault protection are required. P11x can be applied to medium and low voltage electrical systems as an optimized and cost-efficient solution tailored to user's needs.

MiCOM P120, P121, P122 and P123 relays provide comprehensive overcurrent phase and ground fault protection for utilities networks, industrial plants and networks as well as for other applications where overcurrent protection is required. The ground fault protection is sensitive enough to be applied in electrical networks where the ground fault current is low.

Standard and Advanced Feeder Protection Relays — MiCOM 30 and 40 Series

- Easergy MiCOM P132 offers a flexible and powerful feeder management device housed in a 4U case in 24TE, 40TE or 84TE widths. Easergy MiCOM P132 offers bay control for up to 3 devices and a library of 80 pre-engineered templates to reduce engineering time.
- Easergy MiCOM P139 one-box solution is the most advanced in the range. It's available in 40TE or 84TE width, 4U case sizes. It offers bay control for up to 10 devices. It uses a pre-engineered library of up to 300 templates for efficient engineering and commissioning.
- Easergy MiCOM P14x Feeder Management and Overcurrent Protective Relays are especially suitable where a complete or advanced power system protection scheme solution is required.

© 2022 Schneider Electric
All Rights Reserved
9/22/2022

The following models are available:

- Easergy MiCOM P141 – Feeder management relay
- Easergy MiCOM P142 – Feeder management with integrated Autoreclose
- Easergy MiCOM P143 – Feeder management, integrated Autoreclose and Check Synchronism
- Easergy MiCOM P145 – Feeder management, Autoreclose, Check Synchronism and Enhanced operator control functions

Table 5.43: Functions of Feeder Management Relays

ANSI	Protection Function	P111	P115	P116	P120	P121	P122	P123	P125	P126	P127	P132	P139	P141	P142	P143	P145
25	Check synchronizing											•	•			•	•
32	Directional power										•	•	•	•	•	•	•
32V	Voltage controlled direct. reactive power											•	•				
34	Master sequence device												•				
37	Undercurrent			•			•	•		•	•	•	•	•	•	•	•
46	Negative sequence overcurrent			•			•	•		•	•	•	•	•	•	•	•
46BC	Broken conductor			•			•	•		•	•	•	•	•	•	•	•
47	Negative sequence over voltage										•	•	•	•	•	•	•
48	Incomplete sequence relay											•	•				
49	Thermal overload	•		•			•	•		•	•	•	•	•	•	•	•
50/51N	Ground fault	•	•	•		•	•	•	•	•	•	•	•	•	•	•	•
50/51P	3 Phase overcurrent	•	•	•		•	•	•		•	•	•	•	•	•	•	•
50/51P/N	1 Phase or ground overcurrent				•				•			•	•				
50BF	Circuit breaker failure	•	•	•			•	•		•	•	•	•	•	•	•	•
51LR	Motor											•	•				
51V	Voltage controlled overcurrent										•	•	•	•	•	•	•
59/27	Over / Under voltage										•	•	•	•	•	•	•
59N	Residual over voltage								•	•	•	•	•	•	•	•	•
64	Restricted ground fault				•	•	•	•	•	•	•	•	•	•	•	•	•
66	Startup monitoring											•	•				
67N	Ground fault directional								•	•	•	•	•	•	•	•	•
67N	Transient ground fault detection											•	•				
67N	Sensitive directional ground fault											•	•	•	•	•	•
67P	Phase directional										•	•	•	•	•	•	•
67W	Wattmetric ground fault								•	•	•	•	•	•	•	•	•
79	Autoreclose			•				•		•	•	•	•		•	•	•
81	Under / Over frequency										•	•	•	•	•	•	•
81P	Under frequency load shedding											•	•				
81R	Rate of change of frequency										•	•	•	•	•	•	•
85	Protective signaling											•	•				
86	Lock-out	•	•	•	•	•	•	•	•	•	•	•	•	•	•	•	•
CTS	Current transformer supervision										•	•	•	•	•	•	•
SOTF	Switch on to fault	•		•				•		•	•	•	•	•	•	•	•
TCS	Trip circuit supervision	•		•			•	•		•	•	•	•	•	•	•	•
VTS	Voltage transformer supervision										•	•	•	•	•	•	•
YN	Neutral admittance										•	•	•	•	•	•	•
	Circuit breaker monitoring	•		•			•	•		•	•	•	•	•	•	•	•
	Cold load pick-up	•		•			•	•		•	•	•	•	•	•	•	•
	Inrush blocking	•		•			•	•			•	•	•	•	•	•	•
	InterMiCOM											•	•	•	•	•	•
	Limit value monitoring											•	•				

Table 5.44: Typical Catalog Numbers

Catalog Numbers		Description
Basic	P123A00Z412EC0	Series 20 - Substation/Feeder Protection, P123 (24-250Vdc & 48-240Vac), 1/5A CT inputs, 5In/8Out (24-250 Vdc, 24-240Vac), RS485, DNP3
Standard	P14121RABM0B48L	Series 40 - Substation/Feeder Protection, P141 (48-110Vdc), 1/5A CT inputs, 8In/7Out (user configurable voltage thresholds), 3xRJ-45, IEC61850, DNP3
Advanced	P14521RHBM0B48M	Series 40 - Substation/Feeder Protection, P141 (48-110Vdc), 1/5A CT inputs, 16In/20Out (user configurable voltage thresholds), 4 high break outputs, 3xRJ-45, IEC61850, DNP3

© 2022 Schneider Electric
All Rights Reserved
9/22/2022

P211

P220 / P225

P241 / P242 / P243

MiCOM Motor Applications

The MiCOM 10, 20, 30 and 40 series protection relays are designed for various motor protection applications.

Basic Motor Protection Relay (MiCOM P 10 and 20 Series Relays)

The MiCOM P211 and P22x protection relay range are particularly adapted to oil refinery, chemical plant, metallurgy, glass and cement manufacturing, paper mills, electrical and mechanical engineering, food production, mining etc. It is also suitable for water treatment and in pumping stations as well as in steam power plants.

MiCOM P22x range of protection relays is designed for motor protection applications and includes a complete set of protection functions. Models available: MiCOM P220 MiCOM P225

A complete set of protection functions is performed on the measurement of current, voltage and temperature.

In addition to above basic functions, the relay carries out a large number of other functions that enable it to protect and run the motor more effectively.

Advanced Motor Protection Relay (MiCOM P 30 and 40 Series Relays)

Easergy™ MiCOM P24x relays offer advanced protection, control and monitoring of motors and rotating machines. Models available: MiCOM P241, MiCOM P242, MiCOM P243

Easergy™ MiCOM P24x comprehensive protection package includes 87 differential protection and optimization of thermal image monitoring for machines.

These relays not only improve monitoring conditions, but they also facilitate machine maintenance and save on wiring costs.

Table 5.45: Functions available for the different models of the Motor protection MiCOM range of relays

ANSI	Protection Function	P211	P220	P225	P130C	P132	P139	P241	P242	P243
14	Speed switch input	•		•		•	•	•	•	•
25	Check synchronizing					•	•			
27LV	Reacceleration		•	•	•	•	•	•	•	•
30/46/86	Unbalance / Lock out		•	•	•	•	•	•	•	•
32L/O/R	Directional power				•	•	•			
32R	Reverse power				•	•	•	•	•	•
37	Loss of load	•	•	•	•	•	•	•	•	•
37	Undercurrent		•	•	•	•	•	•	•	•
38/49	Thermal overload	•	•	•	•	•	•	•	•	•
40	Loss of field							•	•	•
46	negative sequence overcurrent	•		•	•	•	•	•	•	•
47	Negative sequence over voltage				•	•	•	•	•	•
47N	Neutral over voltage				•	•	•			
50/51P	Phase overcurrent	•	•	•	•	•	•	•	•	•
50BF	Circuit breaker failure			•	•	•	•	•	•	•
50N/51N	Ground fault	•	•	•	•	•	•	•	•	•
50S/51LR/51S	Locked rotor	•	•	•	•	•	•	•	•	•
55	Out of step							•	•	•
59/27	Under / Over voltage			•	•	•	•	•	•	•
59N	Residual over voltage				•	•	•	•	•	•
64N/32N	Wattmetric ground fault				•	•	•	•	•	•
66/48/51	Startup monitoring	•	•	•	•	•	•	•	•	•
67N	Ground fault directional				•	•	•			
67N	Sensitive directional ground fault				•	•	•	•	•	•
67P	Phase directional				•	•	•			
81O	Over frequency				•	•	•			
81U	Under frequency				•	•	•	•	•	•
81R	Rate of change frequency				•	•	•			
87M	Motor differential									•
CTS	Current transformer supervision		•	•	•	•	•	•	•	•
TCS	Trip current supervision		•	•	•	•	•	•	•	•
VTS	Voltage transformer supervision				•	•	•	•	•	•
	anti backspin			•				•	•	•
	Circuit breaker monitoring		•	•		•	•	•	•	•

Table 5.46: Typical Catalog Numbers

Catalog Number		Description
Basic	P225CA0Z112A0CB	Series 20 - Motor Protection, P225 (24-250Vdc & 48-240Vac), 1/5A CT inputs, 6In/5Out (24-250 Vdc, 24-240Vac), 10 RTD's, RS485, Modbus
Standard	P24121RB6M0D18L	Series 40 - Motor Protection, P241 (48-110Vdc), 1/5A CT inputs, 8In/7Out (user configurable voltage thresholds), 10 RTD's, 3xRJ-45, IEC61850
Advanced	P24321RB6M0D08M	Series 40 - Differential Motor Protection, P243 (48-110Vdc), 1/5A CT inputs, 16In/16Out (user configurable voltage thresholds), 10 RTD's, 3xRJ-45, IEC61850

© 2022 Schneider Electric
All Rights Reserved
9/22/2022

P631 / P632 / P633 / P634 / P642 / P643 / P645

MiCOM Transformer Applications

Easergy™ MiCOM P63x and P64x Transformer Differential Protection and Control Devices are designed for fast, selective, short-circuit protection of transformers, motors, generators and other installations.

Models available:

- Easergy MiCOM P631
- Easergy MiCOM P632
- Easergy MiCOM P633
- Easergy MiCOM P634
- Easergy MiCOM P642
- Easergy MiCOM P643
- Easergy MiCOM P645

These devices also incorporate many supplementary protective backup functions.

Table 5.47: Functions available for the different models of the Transformer protection MiCOM range of relays

ANSI	Protection Function	P631	P632	P633	P634	P642	P643	P645
24	Overexcitation		•	•	•	•	•	•
46	Negative sequence overcurrent	•	•	•	•	•	•	•
47	Negative sequence over voltage					•	•	•
49	Thermal overload	•	•	•	•	•	•	•
50/51N	Ground fault	•	•	•	•	•	•	•
50/51P	Phase overcurrent	•	•	•	•	•	•	•
50BF	Circuit breaker failure	•	•	•	•	•	•	•
59/27	Under / Over voltage		•	•	•	•	•	•
67N	Ground fault directional					•	•	•
67P	Phase directional					•	•	•
81	Under / over frequency		•	•	•	•	•	•
87G/64	Restricted ground fault		2	3	3	2	3	3
87T	Transformer differential (windings)	2	2	3	4	2	3	3
CTS	Current transformer (CT) supervision	•	•	•	•	•	•	•
TCS	Trip current supervision	•	•	•	•	•	•	•
VTS	Voltage Transformer (VT) supervision					•	•	•
	2nd harmonic restraint	•	•	•	•	•	•	•
	Overfluxing / 5th harmonic	•	•	•	•	•	•	•

Table 5.48: Typical Catalog Numbers

Catalog Number		Description
Basic	P64221RABM0B48L	Series 40 - Transformer differential (2 sets of CT's) Protection, P642 (48-110Vdc), 1/5A CT inputs, 8In/8Out (user configurable voltage thresholds), 3xRJ-45, IEC61850, DNP3
Standard	P64321RABM0B48M	Series 40 - Transformer differential (3 sets of CT's) Protection, P643 (48-110Vdc), 1/5A CT inputs, 16In/16Out (user configurable voltage thresholds), 3xRJ-45, IEC61850, DNP3
Advanced	P64521RABM0B48M	Series 40 - Transformer differential (5 sets of CT's) Protection, P645 (48-110Vdc), 1/5A CT inputs, 16In/16Out (user configurable voltage thresholds), 3xRJ-45, IEC61850, DNP3

© 2022 Schneider Electric
All Rights Reserved
9/22/2022

P342 / P343 / P344 / P345

MiCOM Generator Applications

The Easergy™ MiCOM P34x generator protection relays provide flexible and reliable integration of protection, control, monitoring and measurement functions for small, medium and large generators.

Models available:

- MiCOM P342
- MiCOM P343
- MiCOM P344
- MiCOM P345

P34x range covers small generators with all necessary industry standard protection and increasing through larger or more important generators with 100% stator ground fault protection via a 3rd harmonic measuring technique, pole slipping and unintentional energization at standstill protection.

Advanced models in the range offer leading techniques for large generators including second neutral voltage inputs for ground fault/inter-turn protection and 100% stator ground fault protection via a low frequency injection technique.

Table 5.49: Functions available for the different models of the Generator protection MiCOM range of relays

ANSI	Protection Function	P342	P343	P344	P345
21	Under-impedance	•	•	•	•
24	Overexcitation		•	•	•
25	Check synchronizing	•	•	•	•
27TN/59TN	100% stator ground fault (3rd)	•	•	•	•
32L/O/R	Directional power	•	•	•	•
37N/37P	Sensitive phase and ground fault undercurrent	•	•	•	•
38/49	Thermal overload	•	•	•	•
40	Loss of field	•	•	•	•
460C	Negative sequence overcurrent	•	•	•	•
46T	Negative sequence thermal	•	•	•	•
47	Negative sequence over voltage	•	•	•	•
49T	Thermal overload	•	•	•	•
50/27	Unintentional energization		•	•	•
50/51P	Phase overcurrent	•	•	•	•
50BF	Circuit breaker failure	•	•	•	•
50N/51N	Ground fault	•	•	•	•
50DT	Interturn / split phase		•	•	•
51V	Voltage dependent O/C	•	•	•	•
59/27	Under / over voltage	•	•	•	•
59N	Residual over voltage	•	•	•	•
64	Restricted ground fault	•	•	•	•
64N/32N	Wattmetric ground fault	•	•	•	•
64R	Rotor ground fault (MiCOM P391 option)	•	•	•	•
64S	100% stator ground fault (low frequency)				•
67N	Sensitive directional ground fault	•	•	•	•
67P	Phase directional	•	•	•	•
67W	Wattmetric sensitive ground fault	•	•	•	•
78	Pole slipping		•	•	•
81AB	Turbine abnormal frequency	•	•	•	•
81	Under / over frequency	•	•	•	•
87G/87GT	Generator differential		•	•	•
CTS	Current transformer supervision	•	•	•	•
TCS	Trip circuit supervision	•	•	•	•
VTS	Voltage transformer supervision	•	•	•	•
	Circuit breaker monitoring	•	•	•	•

Table 5.50: Typical Catalog Numbers

Catalog Number		Description
Basic	P34221RBBM0B38L	Series 40 - Generator Protection, P342 (48-110Vdc), 1/5A CT inputs, 8In/7Out (user configurable voltage thresholds), 10 RTD's, 3xRJ-45, IEC61850, DNP3
Standard	P34321RBBM0B38M	Series 40 - Generator Protection, P342 (48-110Vdc), 1/5A CT inputs, 16In/14Out (user configurable voltage thresholds), 10 RTD's, 3xRJ-45, IEC61850, DNP3
Advanced	P34521RBBM0B38M	Series 40 - Generator Protection, P345 (48-110Vdc), 1/5A CT inputs, 24In/24Out (user configurable voltage thresholds), 10 RTD's, 3xRJ-45, IEC61850, DNP3

© 2022 Schneider Electric
All Rights Reserved
9/22/2022

MiCOM Busbar Differential Applications

High Impedance Differential Protection Relays

P721 / P723

MiCOM P72x high impedance differential protection series provides high impedance differential protection for generators, reactors, motor and busbar applications.

Models available:

- MiCOM P721
- MiCOM P723

MiCOM P72x apart from offering the same application benefits as traditional high impedance electromechanical protection schemes, it combines the added benefits of numerical technology to provide advanced communications, event records, fault records, disturbance records and ancillary protection features.

Combined with the MiCOM P79x, a standalone metrosil and resistor unit, it provides simplified scheme engineering for single or three-phase differential applications.

P741 / P742 / P743 / P746

Numerical Busbar Protection Relay Scheme (Centralized)

Easergy™ MiCOM P746 numerical busbar protection provides centralized complete protection for all voltages level up to extra high voltage busbar configurations.

Models available:

- MiCOM P746

Simple configuration for centralized architecture. The Easergy MiCOM P746 differential busbar protection provides a centralized one box or three boxes architecture and is very simple to use.

It does not need to be deeply engineered and supports easy operation and maintenance of the busbar.

Numerical Busbar Protection Relay Scheme (Distributed)

The Easergy MiCOM P740 numerical busbar protection scheme provides scalable and complete protection for all voltage levels, from low to extra or ultra high-voltage busbar configurations.

Models available:

- MiCOM 741
- MiCOM 742
- MiCOM 743

Easergy MiCOM P740 is one of the fastest and complete in its class, providing secure and sensitive protection for all types of voltage busbar configurations. It is easily adapted to any configuration and can operate with different types of CT.

Table 5.51: Functions available for the different models of the Busbar protection MiCOM range of relays

ANSI	Protection Function	P741	P742	P743	P746
50N/51N	Ground fault		•	•	•
50/51P	Phase overcurrent		•	•	•
50BF	Circuit breaker failure	•	•	•	•
87BB	Busbar	•	•	•	•
87CZ	Check Zones	•			•
87P	Phase segregated differential	8 zones			4 zones
87P	Sensitive ground fault differential	8 zones			
CTS	Current transformer supervision	•	•	•	•
TCS	Trip circuit supervision	•	•	•	•
VTS	Voltage transformer supervision		•	•	•
	Phase comparison				•
	CT saturation detection		•	•	
	CT supervision		•	•	•

Table 5.52: Typical Catalog Numbers

Catalog Number		Description
Standard — High Impedance Busbar Differential P723 with external stabilizing resistor P793	P723000Z112CB0	Series 20 - High Impedance bus differential Protection, P723 (24-250Vdc & 48-240Vac), 1/5A CT inputs, 5In/8Out (24-250 Vdc, 24-240Vac), RS485, Modbus
	P793CF0E2	External stabilizing resistor, 20kJ
Advanced — Low impedance Busbar Differential (1 or 3 box mode)	P74622RABM0C48M	Series 40 - Low Impedance bus differential (7 sets of CT's) Protection, P746 (48-110Vdc), 1/5A CT inputs, 16In/16Out (user configurable voltage thresholds), 3xRJ-45, IEC61850, DNP3

© 2022 Schneider Electric
All Rights Reserved
9/22/2022

MiCOM Distance Applications

Easergy™ MiCOM P43x distance protection and One-Box devices

P433 / P435 / P437 / P439 / P430C

Applied for selective short circuit, ground fault and overload protection in all kinds of medium, high and extra-high voltage systems.

Easergy MiCOM P43x offers a comprehensive range of protection functions as standard with optional hardware and software features available to satisfy customer needs.

Easergy MiCOM P439 One-Box solution includes Bay Control up to 10 devices, including a library of more than 300 pre-engineered bay templates, to reduce engineering time.

Table 5.53: Easergy™ MiCOM P43x Models Available:

Easergy MiCOM P433	MiCOM P439
Easergy MiCOM P435	MiCOM P430C
Easergy MiCOM P437	

Easergy MiCOM P44x - High Performance Relay Distance Protection

P441 / P442 / P443 / P444 / P445 / P446

Easergy MiCOM P44x provides high speed and high performance distance protection for all overhead lines and cable applications and offers a comprehensive range of protection functions as standard.

Easergy MiCOM P44x is complemented by various serial and Ethernet communication protocols including IEC61850. Protection is further enhanced by the use of Programmable Scheme Logic within the device.

The range offers quadrilateral (polygon) or mho characteristics with a long history of high performance, load blinding areas, comprehensive range of teleprotection schemes, Power swing alarm and blocking and Multishot autoreclosure with check synchronism.

Table 5.54: Easergy MiCOM P44x Models Available:

MiCOM P441	MiCOM P444
MiCOM P442	MiCOM P445
MiCOM P443	MiCOM P446

Table 5.55: Functions available for the different models of the Distance protection MiCOM range of relays

ANSI	Protection Function	P433	P435	P437	P439	P441	P442	P443	P444	P445	P446
21/21N	Distance	•	•	•	•	•	•	•	•	•	•
25	Check synchronising	•	•	•	•	•	•	•	•	•	•
32	Directional power	•	•	•	•						
32V	Voltage controlled directional reactive power	•	•		•						
46	Negative sequence overcurrent	•	•	•	•	•	•	•	•	•	•
46/67	Directional negative sequence			•		•	•	•	•	•	•
46BC	Broken conductor	•	•	•	•	•	•	•	•	•	•
49	Thermal overload	•	•	•	•	•	•	•	•	•	•
50/27	Switch on-to fault	•	•	•	•	•	•	•	•	•	•
50/51N	Ground fault	•	•	•	•	•	•	•	•	•	•
50/51P	Phase overcurrent	•	•	•	•	•	•	•	•	•	•
50ST	Stub bus protection	•	•	•	•	•	•	•	•	•	•
59/27	Over / under voltage	•	•	•	•	•	•	•	•	•	•
59N	Residual over voltage	•	•	•	•	•	•	•	•	•	•
62/50BF	Circuit breaker failure	•	•	•	•	•	•	•	•	•	•
67N	Ground fault directional	•	•	•	•	•	•	•	•	•	•
67N	Transient ground fault detection	•	•		•						
67P	Phase directional					•	•	•	•	•	•
67W	Wattmetric ground fault	•	•		•						
68	Out of step tripping	•	•	•	•			•			•
78	Power swing blocking	•	•	•	•	•	•	•	•	•	•
79	Auto-reclose	3 pole	1/3 p	1/3 p	3 pole	3 pole	1/3 p	1/3 p	1/3 p	3 pole	1/3 p
81	Over / under frequency	•	•	•	•	•	•	•	•	•	•
81R	Rate of change of frequency	•	•	•	•			•		•	•
81P	Under-frequency load shedding	•	•		•						
85	Channel aided scheme logic	•	•	•	•	•	•	•	•	•	•
CVTS	Capacitive voltage transformer supervision					•	•		•		
TCS	Trip circuit supervision	•	•	•	•	•	•	•	•	•	•
VTS/CTS	Voltage / current transformer supervision	•	•	•	•	•	•	•	•	•	•
ΔI/ΔV	Delta directional comparison							•			•
YN	Neutral admittance	•	•		•						
	Process Bus interface for SV						•	•		•	•
	Mutual compensation			•		•	•	•	•		•

Table 5.56: Typical Catalog Numbers

Catalog Numbers		Description
Standard Version	P44321RMBM0H98M	Series 40 - Distance Protection, P443 (48-110Vdc), 1/5A CT inputs, 16In/24Out (user configurable voltage thresholds), 1300nm single-mode dual channel, 3xRJ-45, IEC61850, DNP3
Advanced Version	P44521ROBM0J98L	Series 40 - Distance Protection, P445 (48-110Vdc), 1/5A CT inputs, 16In/16Out (user configurable voltage thresholds), 1300nm single-mode dual channel, 3xRJ-45, IEC61850, DNP3

© 2022 Schneider Electric
All Rights Reserved
9/22/2022

MiCOM Line Differential Applications

MiCOM P521 - Feeder Differential Protection Relays

P251 / P532

MiCOM P521 provides high speed, two ended current differential unit protection of overhead lines and underground cables in applications such as ring mains and parallel feeders.

Models available: MiCOM P521

MiCOM P521 relay provides fast, efficient current differential protection. It is very flexible and can be applied to a wide range of power systems. Offering a variety of communications interface options, MiCOM P521 provides valuable local and remote back-up protection

Easergy™ MiCOM P532 - Line Differential Protection and Bay Control Device

Easergy MiCOM P532 provides a two-ended line differential protection function with all of the necessary protection communication interfaces.

Easergy MiCOM P532 is an inexpensive line differential protection device that features optional control functions for rapid and selective short-circuit and overload protection of cables and power lines.

It provides a rapid three-stage differential protection system using a tripping characteristic with multiple knee points amongst the numerous supplementary functions. The optional control functions enable Easergy MiCOM P532 to control up to six switchgear units fitted to a bay panel, and to monitor their contact positions.

Easergy MiCOM P54x - Line Differential Protection Relays

P541 / P542 / P543 / P544 / P545 / P546

Easergy MiCOM P54x is designed for high performance overhead line and cable applications, it interfaces readily with the longitudinal (end to end) communications channels and has optional distance backup protection.

Models available:

- MiCOM P541, P542, P543, P544, P545, P546

Easergy MiCOM P541-P546 series provides high-speed current differential unit protection. The P54x is designed for all overhead line and cable applications, as it interfaces readily with the longitudinal (end to end) communications channel between line terminals.

A full range of back-up protection is integrated. This enhances the dependability of the protection, as hot-standby elements (such as distance zones and overcurrent) can be brought into service whenever a signaling channel outage may occur.

Table 5.57: Functions available for the different models of the Line Differential protection MiCOM range of relays

ANSI	Protection Function	P521	P530C	P532	P541	P542	P543	P544	P545	P546	P547
21	Distance						•	•	•	•	•
25	Check synchronizing			•			•	•	•	•	•
37	Loss of load / undercurrent										
46	Negative sequence overcurrent	•		•			•	•	•	•	•
49	Thermal overload	•	•	•	•	•	•	•	•	•	•
50/51N	Ground fault	•	•	•	•	•	•	•	•	•	•
50/51P	Phase overcurrent	•	•	•	•	•	•	•	•	•	•
50BF	Circuit breaker failure	•	•	•	•	•	•	•	•	•	•
59/27	Over / under voltage		•	•			•	•	•	•	•
64W	Wattmetric ground fault		•	•			•	•	•	•	•
67N	Ground fault directional		•	•			•	•	•	•	•
67N	Sensitive directional ground fault			•			•	•	•	•	•
67P	Phase directional		•	•			•	•	•	•	•
78	Power swing blocking						•	•	•	•	•
79	Auto-reclose	3 pole	3 pole	3 pole		3 pole	1/3 pole	1/3 pole	1/3 pole	1/3 pole	1/3 pole
81	Under / over frequency			•			•	•	•	•	•
87L	Line differential (terminal)	2	2	2	2/3	2/3	2/3	2/3	2/3	2/3	
87L	Phase comparison										•
CTS	CT supervision	•					•	•	•	•	•
TCS	Trip circuit supervision	•	•	•	•	•	•	•	•	•	•
	2 breaker configuration							•		•	
	2nd harmonic restraint	•	•	•	•	•	•	•	•	•	
	Copper wire signaling	•	•	•							
	Direct / permissive inter tripping	•	•	•	•	•	•	•	•	•	
	FO signaling	•	•	•	•	•	•	•	•	•	
	In Zone transformer	•			•	•	•	•	•	•	
	PLC signaling										•
	SDH / Sonet networks						•	•	•	•	
	Vector compensation	•			•	•	•	•	•	•	

Table 5.58: Typical Catalog Numbers

Catalog Number		Description
Basic Version	P521A0GZ412DG0	Series 20 - Line differential Protection, P521 (24-250Vdc & 48-240Vac), 1/5A CT inputs, 5In/8Out (24-250 Vdc, 24-240Vac), 1300nm single-mode single channel, RS485, DNP
Standard Version	P54321RCBM0H98M	Series 40 - Line differential Protection, P543 (48-110Vdc), 1/5A CT inputs, 16In/14Out (user configurable voltage thresholds), 1300nm single-mode dual channel, 3xRJ-45, IEC61850, DNP3
Advanced Version	P54521RCBM0H98M	Series 40 - Line differential Protection, P545 (48-110Vdc), 1/5A CT inputs, 24In/32Out (user configurable voltage thresholds), 1300nm single-mode dual channel, 3xRJ-45, IEC61850, DNP3

© 2022 Schneider Electric
All Rights Reserved
9/22/2022

P138 / P436 / P438

MiCOM Railway Applications

Easergy™ MiCOM P138 - Overcurrent Protection Device for Rail Applications

The Easergy MiCOM 30 series rail devices are dedicated to railway catenary protection. The Easergy MiCOM P138 specifically provides directional overcurrent protection for rail applications

The Easergy MiCOM P138 enables a wide range of applications to protect supplies and catenaries in classic and autotransformer-fed (AT) systems. With easy connection to virtually all substation and catenary network management systems, it is enhanced by a complete range of backup protection and automation functions

Easergy MiCOM P638 - Transformer Protection Device for Rail Applications

Easergy MiCOM Px30 rail devices are dedicated to railway catenary protection. The Easergy MiCOM P638 provides transformer differential protection

Easergy MiCOM P638 enables a wide range of applications to protect supplies and catenaries in classic and autotransformer-fed (AT) systems. With easy connection to virtually all substation and catenary network management systems, Easergy MiCOM P638 is enhanced by a complete range of backup protection and automation functions

Easergy MiCOM P436 and P438 - Distance Protection Devices for Rail Applications

Easergy MiCOM 30 series rail devices are dedicated to railway catenary protection. The Easergy MiCOM P436 provides catenary protection for classic and two-phase AT feeders.

Easergy MiCOM P436 and Easergy MiCOM P438 enable a wide range of applications to protect supplies and catenaries in classic and autotransformer-fed (AT) systems. With easy connection to virtually all substation and catenary network management systems, the two models are enhanced by a complete range of backup protection and automation functions.

Table 5.59: Functions available for the different models of the Railway protection MiCOM range of relays

ANSI	Protection Function	P138	P436	P438	P638
21/21N	Distance		•	•	
27/59	Over / under voltage	•	•	•	•
49	Thermal overload	•	•	•	•
50/27	Switch on-to fault	•	•	•	
50H	High current supervision	•	•	•	
50/51N	High current ground fault (tank protection)	•			•
50/51P	Phase overcurrent	•	•	•	•
62/50BF	Circuit breaker failure	•	•	•	•
67P	Phase directional	•	•	•	•
81	Under / over frequency	•	•	•	•
86	Lock-out	•	•	•	•
87T	Transformer differential (windings)				2
di/dt,dv/dt, dΦ /dt	Train startup detection		•	•	
Hz	Rail catenary protection		16 2/3	25/50/60	
TCS	Trip circuit supervision	•	•	•	•
CTS	Current transformer supervision		•	•	
VTS	Voltage transformer supervision	•	•	•	
	2nd harmonic restraint	•	•	•	•
	3rd, 5th, 7th harmonic blocking	•	•	•	
	Defrost protection	•	•	•	
	High impedance fault detection	•	•	•	
	InterMiCOM	•	•	•	

Table 5.60: Typical Catalog Numbers

Catalog Numbers	Descriptions
P138849011M0303409612947	Series 30, Feeder relay, 60-250 Vdc/100-230 Vac with 4 high break contact plus 10 inputs and 16 outputs , 61850
P438849020M0308417616947	Series 30, Distance relay, 60-250 Vdc/100-230 Vac with 4 high break contact plus 10 inputs and 16 outputs , 61850
P638849011M0303406612947	Series 30, Transformer Relay, 60-250 Vdc/100-230 Vac with 4 high break contact plus 10 inputs and 16 outputs , 61850

© 2022 Schneider Electric
All Rights Reserved
9/22/2022

SAGE RTUs — Introduction

A variety of SAGE RTU models allow you to choose the right solution for your application. You can deploy the hardware that meets the requirements of each installation. Important distinctions such as physical size, physical I/O quantities, and communications port medium allow you to choose the RTU meeting each application's requirements — no more and no less. Each SAGE RTU provides the same browser-based user interface for easy configuration and setup. Each offers IED integration, NERC CIP security, IEC 61131-based logic functions, communications protocols, and a custom applications library. Each RTU uses the same CPU, firmware, and configuration files, which simplifies spare parts stocking and engineering effort, saving time and money.

Schneider Electric has many years of experience offering custom designed retrofit solutions that provide improved functionality over obsolete RTUs while minimizing the field installation and commissioning time required for the change out of equipment. Each retrofit RTU is specifically designed to make use of as much of the existing equipment as possible. Special interface cards are delivered to connect to the existing termination boards. Terminations are left in place, eliminating the need for field personnel to buzz-out field wiring. Retrofits for Westinghouse Redac, GE GEtac, CDC 44-500, CDC 44-550, Harris 5000, L&G 8000/9000, and Tasnet are already available [1]

Features and Benefits

- Time Saving
- Easy Upgrade
- Scalable I/O
- Excellent Support
- Made in America
- Cyber-Secure
- Intuitive Configuration
- All Protocols & Apps Included
- Extensive Protocol Suite
- Math and Logic Apps
- Alarming & Annunciation
- SEL Relay Integration
- Grid Automation Apps
- Custom Retrofit Solutions
- Common CPU and Firmware

Table 5.61: SAGE Product Matrix

Model	2400	4400	3030M	1410	1430	1450
	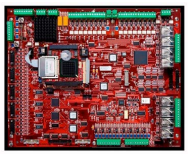 2400	4400	3030M	1410	1430	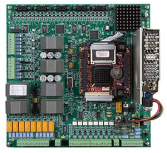 1450
Applications Covered						
Substation Data Concentrator		•	•	•		
Substation RTU	Large Substation	Large Substation	•			
Automation Controller	•	•	•	•	•	•
Protocol Converter	•	•	•	•	•	•
NERC CIP Cybersecure IED Gateway	•	•	•			
Sectionalizer	•					•
Cap Bank Controller	•					•
Feeder RTU					Built in Status and Control	Built in AC Analog Inputs
Flexible Communications Interfaces				•	•	
Characteristics						
Physical Size	12" x 15"	19" x 7" x 10.5"	19" x 5.25" x 10.5"	8" x 5"	12" x 8"	11" x 11"
RS-232	4 / 12	16	16	2 / 10	2 / 10	4 / 12
Serial Fiber	0	0	0	1	0	0
RS-485	0	0	0	1	2	0
Ethernet	2 / 6	2 / 5	2 / 5	2 / 6	2 / 6	2 / 6
Digital Input	16 / 240	224	224	0	16	8
Analog Input	8 / 232	256	0 / 256	0	0 / 256	6 (AC)
Digital Output	128	128 SBO / 256 DO	64	0	4	4
1 ms SOE	0 / 512	256 / 512	0 / 512	0 / 512	0 / 512	0
Analog Output	12	0	0	0	0	0
Mount	Panel	Rack	Rack	Panel / Din	Panel	Panel

- First # indicates built-in capacity, second # indicates maximum expansion capacity
- All units have the same software functionality (Protocols, Applications, User Interface)
- SAGE 1450 Analogs are AC Input type and allow 3 Current and 3 Voltage Inputs. All other models represent milliamp transducer DC Analog Input
- SAGE 4400 has capacity for 128 SBO type Trip / Close pairs and up to 256 Digital Output Points, all on scalable XT Boards
- All Inputs and Outputs in this table are Hardware wired points. Does not include points from IED's.

[1] Visit our website at www.sage-rtu.com for more details.

© 2022 Schneider Electric
All Rights Reserved
9/22/2022

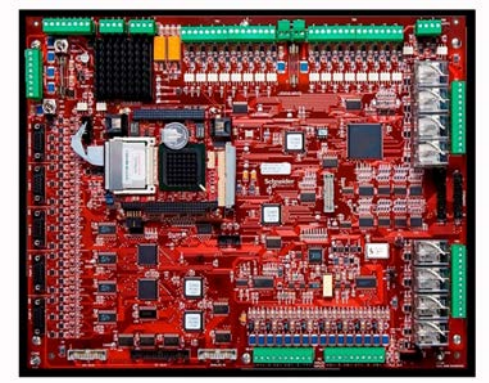

SAGE 2400

SAGE 2400 RTU

In the SAGE RTU family, the SAGE 2400 RTU offers the most comprehensive physical I/O capabilities and versatile application. Designed for traditional RTU applications, it can accommodate hundreds of analog, digital, and control I/Os along with the easy configuration, protocols, and applications from all SAGE RTUs.

Each SAGE RTU provides the same browser-based user interface for easy configuration and setup. Each RTU offers IED integration, NERC CIP security, IEC 61131-based logic functions, communications protocols, and a custom applications library. *[2]*

Applications	
• Large Substation RTU • Automation Controller	• Protocol Converter • NERC CIP Cybersecure IED Gateway
Features Onboard	
• Size: 12 x 15 Inches • AMD LX-800 500 MHz CPU with 1 GB flash memory (Common to all SAGE RTU) • 4x RS232 Serial Ports: Options up to 8 additional RS-232 Serial Ports *[3]* (12 total serial ports) • 2x 10/100 Fast Ethernet: Optional 4 Port Switch Available *[3]* • 10-33 VDC Power Input • LEDs for visual indications of communications, digital ins & outs, and other functions	• -40 C to +85 C operating temperature range for reliability in the harshest environments. • All field connections designed to pass: – ANSI C37.90-1979 (R1982) – ANSI C37.90.1-1989 – IEEE 472-1974 • Removable I/O terminal blocks • Full three-year warranty standard
Baseboard I/O	
• 16 Digital Input / Accumulator Points • 8 DC Analog Inputs (±5 VDC, 0-5 VDC, 1-5 VDC, ±1 mA, 0-1 mA, 4-20 mA, 10-50 mA)	• 4x SBO or 8x DO Control points (Configurable) • 2x Alarm Contact points
I/O Expansion Capabilities	
• Up to 240 Digital Input Points (5 ms) • Up to 232 DC Analog Input Points (Several Variances Available) • Up to 128 SBO Trip Close Pairs / 256 Digital Output Points • Up to 512 1ms SOE Digital Input Points *[3]* • Up to 12 Analog Output Points *[4]*	• A combination of Special Function Bus Cards – ACI *[4]* – 1MS SOE *[4]* – Digital Output • IRIG-B *[3]* • GPS *[3]*
Same Firmware Capabilities in all SAGE RTUs	
• Intuitive config@WEB Browser Based User Interface: No proprietary Software Required • Extensive Protocol Suite included with every unit • Configurable Math, Logic, and Automation Applications • IEC 61131 Compliant IsaGRAF Programming Interface • NERC CIP Cybersecurity • Advanced Logging with Syslog Client • Force Point Data	• SEL IED Management (AutoConfig, EVE File Storing, Config Change Management) • Detailed Comm Diagnostics and Counters: PCAP, Protocol Captures • Secure Ethernet Protocols – IPSec / IKE – HTTPS – SSL / SSH – SFTP – Embedded Firewall

[2] See our website for a full catalog of I/O Expansion Options.
[3] On PC/104 Expansion Cards
[4] On Discontinued Cards

© 2022 Schneider Electric
All Rights Reserved
9/22/2022

SAGE 3030

Designed for Substation Gateway applications, the SAGE 3030 Magnum can accommodate many vendor agnostic IED's via Serial and Ethernet communications. The SAGE 3030M RTU offers the most communications ports while allowing traditional hardwire I/O options from other SAGE models.

Each SAGE RTU provides the same browser-based user interface for easy configuration and setup. Each RTU offers IED integration, NERC CIP security, IEC 61131-based logic functions, communications protocols, and a custom applications library. *[5]*

SAGE 3030 Magnum RTU

Applications	
• Substation Data Concentrator • Substation RTU • Automation Controller	• Protocol Converter • NERC CIP Cybersecure IED Gateway
Features Onboard	
• Size: 19 x 5.25 x 10.5 Inches • Serial Ports: 16 x RS-232 • 40° to +80° C Operating Temperature • Ethernet Ports: 2 x 10/100 Mbps (Optional 3 port Ethernet switch) • AMD LX-800 500 MHz CPU with 1 GB flash memory (Common to all SAGE RTU) • Non Windows® OS (VxWorks) • PC/104™ bus architecture • Time Synching – Continuous IRIG-B output with built-in bus to all communication ports for IRIG-B In, GPS, RTC, or protocol time synchronization – GPS *[6]* – Protocols – Arbiter	• 2x Alarm Contacts • Wide range Power Input Options • 85-254 VAC, 85-350 VDC • Designed for Electric Utility applications • Meet IEEE 472, ANSI C37.90 SWC • Meet C37.90.1 standards • Full 3 Year Warranty Standard • Rugged relay-style metal enclosure for easy rack mounting • Over 100 LEDs for positive visual Indications – Serial Communications (TX, RX, DCD/ +5V, CTS, RTS) x 18 Power, Run, Reset, Local, Time Source Fail, IED Failed, User Logged In, Config Changed, RLL Running, Ethernet Lik, and Alarm 1 & 2
Hardware I/O Options	
• Up to 224 Status / Acc Inputs (5 ms) • Up to 64 SBO Trip Close Pairs (momentary and latching)	• Up to 256 DC Analog Input points *[6]* • Up to 512 1ms SOE Status inputs *[6]*
Same Firmware Capabilities in all SAGE RTUs	
• Intuitive config@WEB Browser Based User Interface • No proprietary Software Required • Extensive Protocol Suite included with every unit • Configurable Math, Logic, and Automation Applications • IEC 61131 Compliant IsaGRAF Programming Interface • NERC CIP Cybersecurity • Advanced Logging with Syslog Client • SEL IED Management (AutoConfig, EVE File Storing, Config Change Management)	• Force Point Data • Detailed Comm Diagnostics and Counters • PCAP, Protocol Captures • Secure Ethernet Protocols • IPSec / IKE – HTTPS – SSL / SSH – SFTP – Embedded Firewall

SAGE 4400

The SAGE 4400 combines the best features of the SAGE 3030M and the SAGE 2400. The 4400 is a rack mounted RTU with all the communications capabilities of the 3030M and the I/O flexibility of the SAGE 2400. The 4400 uses the same I/O cards as the other SAGE products for maximum retrofit capability and is designed for applications that require a significant capability for discrete I/O. It includes enough processor power for integration of many IED's as well as intelligent embedded applications and logic functions.

Each SAGE RTU provides the same browser-based user interface for easy configuration and setup. Each RTU offers IED integration, NERC CIP security, IEC 61131-based logic functions, communications protocols, and a custom applications library. *[5]*

SAGE 4400 RTU

Applications	
• Substation Data Concentrator • Large Substation RTU • Automation Controller	• Protocol Converter • NERC CIP Cybersecure IED Gateway
Features Onboard	
• Size: 19 x 7 x 10.5 Inches • -40° to +80° C Operating Temperature • AMD LX-800 500 MHz CPU with 1 GB flash memory (Common to all SAGE RTU) • Serial Ports: 16 x RS232 with Comm Status LED's on Front Panel – RTU status LED's on Front Panel – 5VDC available on each port (up to 5W total) – 300-115,000 bps available • Ethernet Ports: 2 x 10/100 Mbps (Optional 3 port switch *[6]*) • 2x Alarm Contacts Onboard	• Remote/Local Switch with available Dry Contacts • Time Synching – IRIG-B In -> Distributed to all 16 Serial ports – GPS *[6]* – Protocols – Arbiter • Power Input Options – 10-33 VDC – With Input Fusing and power switch – Grounding Bar
Hardware I/O Options	
• Options with more user friendly cable interface (See attached brochure for I/O details) • Up to 224 Status Inputs (5 ms) • Up to 256 - 1 ms SOE Status Inputs	• Up to 128 SBO Trip Close Pairs • Up to 256 DC Analog Input points • Up to 256 DO Digital Output Points
Same Firmware Capabilities in all SAGE RTUs	
• Intuitive config@WEB Browser Based User Interface. No proprietary Software Required • Extensive Protocol Suite included with every unit • Configurable Math, Logic, and Automation Applications • IEC 61131 Compliant IsaGRAF Programming Interface • NERC CIP Cybersecurity • Advanced Logging with Syslog Client • SEL IED Management (AutoConfig, EVE File Storing, Config Change Management)	• Force Point Data • Detailed Comm Diagnostics and Counters • PCAP, Protocol Captures • Secure Ethernet Protocols – IPSec / IKE – HTTPS – SSL / SSH – SFTP – Embedded Firewall

[5] See our website for a full catalog of I/O Expansion Options.
[6] Available with PC/104 Expansion Cards

© 2022 Schneider Electric
All Rights Reserved
9/22/2022

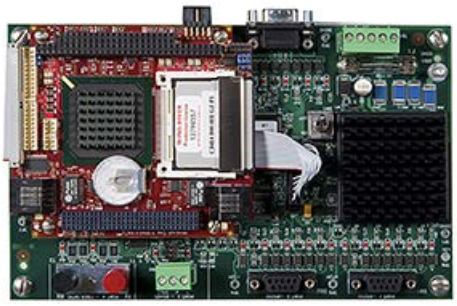

SAGE 1410

Smart and compact data concentrator / protocol converter / gateway solution.

Each SAGE RTU provides the same browser-based user interface for easy configuration and setup. Each RTU offers IED integration, NERC CIP security, IEC 61131-based logic functions, communications protocols, and a custom applications library.

SAGE 1410 RTU

Applications	
• Substation Data Concentrator • Automation Controller	• Protocol Converter • Flexible Communications Interfaces
Features	
• Compact Footprint 8 x 5 x 2 (W x L x H) Inches • 40° to +85° C Operating Temperature • Two — Built-in 10/100 Mbps Ethernet® ports (independent IPs) : Optional four port Ethernet switch [7] • Two RS232 w/LEDs for DCD, RX, RTS, CTS and TX (Expands to 10 [7]) • One RS485 w/LEDs for RX and TX (2 wire operation) • One Fiber Optic communications w/LEDs for RX and TX • AMD LX-800 500 MHz CPU with 1 GB flash memory (Common to all SAGE RTU) • PC/104™ bus architecture for easy future upgrades • Optional 125 VDC/20-60 VDC/120 VAC power supply	• Separate PPP port for serial dial-up • Non-Windows® OS (VxWorks) • Designed for Electric Utility applications – Meet IEEE 472, ANSI C37.90 SWC – Meet C37.90.1 standards • Optional on board GPS Receiver • Optional IRIG-B Input/Output • On board LEDs show operational status: Power / Full Comm Status indications • Full three Year Warranty Standard • Accepts 12-33VDC Input Power directly
Same Firmware Capabilities in all SAGE RTUs	
• Intuitive config@WEB Browser Based User Interface. No proprietary Software Required • Extensive Protocol Suite included with every unit • Configurable Math, Logic, and Automation Applications • IEC 61131 Compliant IsaGRAF Programming Interface • NERC CIP Cybersecurity • Advanced Logging with Syslog Client • SEL IED Management (AutoConfig, EVE File Storing, Config Change Management)	• Force Point Data • Detailed Comm Diagnostics and Counters • PCAP, Protocol Captures • Secure Ethernet Protocols – IPSec / IKE – HTTPS – SSL / SSH – SFTP – Embedded Firewall

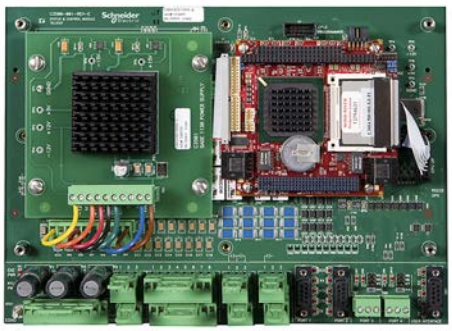

SAGE 1430

Compact status and control module with powerful IED integration capabilities.

Each SAGE RTU provides the same browser-based user interface for easy configuration and setup. Each RTU offers IED integration, NERC CIP security, IEC 61131-based logic functions, communications protocols, and a custom applications library.

SAGE 1430 RTU

Applications	
• Feeder RTU with built in Status and Control • Automation Controller	• Protocol Converter • Flexible Communications Interfaces
Features	
• Compact Footprint: 8 x 12.5 x 4 (W x L x H) Inches • 40° to +85° C Operating Temperature • 2 - Built-in 10/100 Mbps Ethernet® ports (independent IPs) • Optional – 4 port Ethernet switch • 2 RS232 w/LEDs for DCD, RX, RTS, CTS and TX (Expandable to 10)	• 2 RS485 w/LEDs for RX and TX (2 wire operation) • Separate PPP port for serial dial-up • AMD LX-800 500 MHz CPU with 1 GB flash memory (Common to all SAGE RTU) • Non Windows® OS (VxWorks) • PC/104™ bus architecture
Hardware I/O	
• 16 Digital Inputs (Status/Accumulator/SOE) • 4 T/C Momentary Controls (8 relays) • Easy to connect removable Phoenix® type terminal blocks • Designed for Electric Utility applications – Meet IEEE 472, ANSI C37.90 SWC – Meet C37.90.1 standards	• Optional on board GPS Receiver • Optional IRIG-B Input/Output • Optional DC Analog Input Module • On board LEDs show operational status (Power / Full Comm Status indications) • Full 3 Year Warranty Standard • Built-in 125 VDC/20-60 VDC/120 VAC power supply
Same Firmware Capabilities in all SAGE RTUs	
• Intuitive config@WEB Browser Based User Interface. No proprietary Software Required • Extensive Protocol Suite included with every unit • Configurable Math, Logic, and Automation Applications • IEC 61131 Compliant IsaGRAF Programming Interface • NERC CIP Cybersecurity • Advanced Logging with Syslog Client • Force Point Data	• SEL IED Management (AutoConfig, EVE File Storing, Config Change Management) • Detailed Comm Diagnostics and Counters • PCAP, Protocol Captures • Secure Ethernet Protocols – IPSec / IKE – HTTPS – SSL / SSH – SFTP – Embedded Firewall

[7] With PC/104 Expansion Cards

© 2022 Schneider Electric
All Rights Reserved
9/22/2022

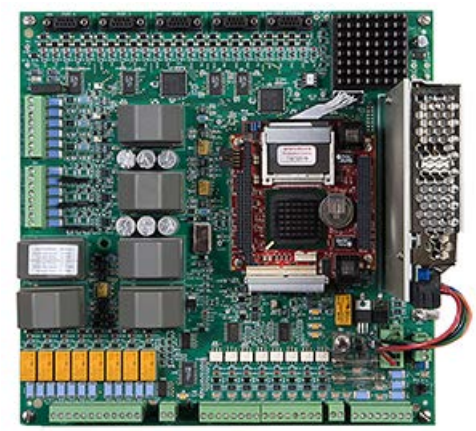

SAGE 1450

SAGE 1450 RTU

A powerful pole-top distribution automation platform with all the functionality of a gateway. AC Input (ACI) option provides an advanced transducer-less AC analog input capability. The SAGE 1450 can be used for interfacing to conventional PTs and CTs as well as standard current/voltage linepost sensors such as the Square D LSCV Line Post Sensors or Lindsey CVMI linepost sensors. These terminations include custom instrument-grade transformers, designed for high linearity and ultra low phase shift, which provide the high impedance inputs required for the linepost sensor resistor divider voltage outputs.

Each SAGE RTU provides the same browser-based user interface for easy configuration and setup. Each RTU offers IED integration, NERC CIP security, IEC 61131-based logic functions, communications protocols, and a custom applications library.

Applications

- Feeder RTU with built in AC Analog Inputs
- Automation Controller
- Protocol Converter
- Sectionalizer
- Cap Bank Controller

Features

- Compact Footprint: 11 x 11 x 4 Inches
- 40° to +85° C Operating Temperature
- Two Built-in independent Ethernet Ports
- Optional 4 Port Ethernet switch *[8]*
- Four Built-in serial ports (expands to 12 *[8]*)
- Separate PPP port for serial dial-up
- AMD LX800 500 Mhz CPU w/ 1 GB Flash Memory
- Built-in Battery Charger w/low voltage disconnect
- On Board I/O with removable terminal blocks
  - 8 Digital Inputs (Sts/Accum/SOE)
  - 4 T/C Mom Pairs (8 relays - 2A@30VDC)
  - 6 Transducerless AIs (3 current & 3 voltage)
  - 2 DC Analog Inputs (Input Voltage and Battery Voltage)
- On board LEDs show operational status
  - Power, status, control indications
  - Full Comm Status indications
- Accepts 9-33 VDC Input Power directly
- Optional 125 VDC/20-60 VDC/120 VAC on-board power supply
- Designed for Electric Utility applications
  - Meet IEEE 472, ANSI C37.90 SWC
  - Meet C37.90.1 standards
- Optional On-Board GPS Receiver *[8]*
- Optional IRIG-B Input/Output *[8]*
- Full 3 Year Warranty Standard

Same Firmware Capabilities in all SAGE RTUs

- Intuitive config@WEB Browser Based User Interface. No proprietary Software Required
- Extensive Protocol Suite included with every unit
- Configurable Math, Logic, and Automation Applications
- IEC 61131 Compliant IsaGRAF Programming Interface
- NERC CIP Cybersecurity
- Advanced Logging with Syslog Client
- SEL IED Management (AutoConfig, EVE File Storing, Config Change Management)
- Force Point Data
- Detailed Comm Diagnostics and Counters
- PCAP, Protocol Captures
- Secure Ethernet Protocols
  - IPSec / IKE
  - HTTPS
  - SSL / SSH
  - SFTP
  - Embedded Firewall

SAGE Sales and Support

New RTU Sales	
Email:	USUtilityQuotes@se.com
Tips:	Tips: Power Input Requirements, Hard wired I/O Requirements, Communications Ports Needed, Mounting, Other options needed will expedite the quotation process.

Spares and Upgrades	
Phone:	(713) 920-6897
Email:	USUtilityQuotes@se.com
Tips:	Having the Part Number from the Baseboard or CPU will help choose the right spare for your application.

Technical Support	
Phone:	(713) 920-6832
Email:	sagertu_support@se.com
Tips:	Generally a copy of the configuration, data traps, and the firmware version will help us diagnose any problems.

Repairs	
Email:	USUtilityQuotes@se.com
Tips:	Have the Tag numbers from the affected products, and the Serial Number. Remove known good parts to minimize any repair costs.

[8] With PC/104 Expansion Cards

© 2022 Schneider Electric
All Rights Reserved
9/22/2022

New!

Easergy™ T300 RTUs — Introduction

The Easergy T300 is a single, powerful feeder RTU designed to prepare your business for the future. It helps you evolve with the grid, improve downtime tolerance, and manage increasing energy demand. It also helps you meet increased quality and performance requirements, optimize costs, and improve the efficiency of your electrical distribution network. Easergy T300 Remote Terminal Unit (RTU) is a modular platform of hardware and firmware, and an application building block for Medium Voltage and Low Voltage public distribution network management. It offers a single solution for control and monitoring from a simple pole-top device to a large MV/MV or MV/LV substation. [1]

Features and Benefits

- Reduce MV and LV outage durations (SAIDI)
- Centralized and decentralized MV and LV distribution network management: fault location, isolation, and service restoration
- Private network management (MV loops): Self-healing network management – Automatic Transfer Switch
- Volt/VAR optimization support for distributed generation integration
- MV and LV power and quality measurement according to standard EN 50160
- Synchronize voltage measurements on the feeder in order to facilitate distributed generation integration
- Asset management efficiency. Reduce CAPEX with a single, multi-application, modular offer
- Strong Cybersecurity Management

Table 5.62: Easergy T300 RTUs — Overview

HU250 Head Unit and Communication Gateway	SC150 MV Switchgear Controller	LV150 Transformer an LV Switchboard Monitoring
HU250	SC150	LV150
Applications covered:	**Applications covered:**	**Applications covered:**
• Communication Gateway • Automation Controller • Sectionalizer • Cap Bank Controller & Volt Var Optimization • Distributed energy resources control and monitoring • Cybersecurity Gateway – Compliant with IEC 62351 and IEEE P1686 – SCADA communication security (IEC 62351-5) – Local and remote access security based on RBAC (IEC 62351-8) – Connection security for maintenance (local and remote): HTTPS, SSH – Protocol security for file transfer: SFTP – Authentication by centralized Radius client	• MV Network Management. Modular up to 24 Load Break Switches • Non-Directional and Directional Fault Detection • Sectionalizer and Auto Transfer Source Automation • Power measurement (IEC 61557-12) • Power Quality (IEC 61000-4-30 Class S) • Underground MV/MV and MV/LV substation control and monitoring • Overhead load break switch (LBS) control	• LV network distribution monitoring • LV Power measurement according to IEC 61557-12 • LV Power quality according IEC 61000-4-30 Class S • Pad-mounted and Overhead Transformer temperature monitoring • LV Broken conductor detection (fuse detection)

Table 5.63: Easergy T300 Power Supplies

PS50 and PS25 Power Supplies	
PS50	PS25
Wide range of smart power supplies. The Easergy T300 back-up power supplies are designed for power supply interruptions in order to maintain control and monitoring of the MV substation during the outage.	

[1] Refer to catalog (document number NRJED314621EN) or the Easergy T300 product range for more information.

© 2022 Schneider Electric
All Rights Reserved
9/22/2022

HU250

Easergy HU250 Communication Gateway

Easergy™ HU250 is a powerful and flexible communication gateway for all Easergy T300 configurations. *[2]*

- Easergy HU250 can also be used as a standalone gateway for third-party IEDs
- Open to any communication system and protocol
- Compliant with cyber security standards
- Advanced configuration tools
- Open to IEC 61131 applications
- Web server for easy commissioning and maintenance
- Easy remote and local firmware updates
- Secure Wi-Fi connectivity

Table 5.64: Easergy HU250

Description	Catalog Number
Easergy HU250: head unit communication gateway with cyber security management	EMS59000

SC150

Easergy SC150 Medium Voltage Switch Controller

All advanced functions for MV line and switchgear management in a compact box. *[2]*

- Switchgear control and monitor
- Advanced fault detection
- Power measurement
- Power quality
- Sectionalizer automation
- Embedded operator HMI
- Automation systems
  - Automatic Transfer Source (ATS), self healing, etc., are hosted in HU250 and are designed in a IEC 61131-3 PLC workbench.
  - The sectionalizer automation (SEC) concerning one switchgear is managed by the SC150 module. This automation is factory predefined but configurable on site. This automation provides the autonomous ability to open the MV switch following detection of a number of fault currents.

Table 5.65: Easergy SC150

Description	Catalog Number
SC150 Medium Voltage Switch Controller CT-LPVT/VT, 1/5 A - LPVT/VT sensors	EMS59201
SC150 Medium Voltage Switch Controller CT-CAPA, 1/5 A - VPIS/VDS/PPACS sensors	EMS59202

LV150

Easergy LV150 Low Voltage Transformer Monitor

The Easergy LV150 is an unmatched low voltage monitoring module designed for the public MV/LV substation. It combines accurate 3-phase energy and power measurements with data logging, power quality analysis, alarming and temperature capabilities not typically available in such a compact RTU. The Easergy LV150 is compliant with stringent international standards that enhance its metering accuracy and power quality measurements, as specified by the safety standard requirement for the MV/LV substation. Easergy LV150 gives you the energy intelligence and control needed to track performance, stay informed in real time of critical conditions and empower you to make strategic decisions. It will help you increase reliability, maximize the use of resources and improve service. *[2]*

Applications

- Transformer temperature monitoring
- LV incomer power monitoring
- LV incomer power quality monitoring
- LV network voltage fault detection (loss of neutral at transformer level)

Table 5.66: Easergy LV150

Description	Catalog Number
Low Voltage Transformer Monitor	EMS59300

[2] Refer to catalog (document number NRJED314621EN) or the Easergy T300 product range for more information.

© 2022 Schneider Electric
All Rights Reserved
9/22/2022

PS50

PS25

Easergy PS50 and PS25 Backup Power Supplies

The Easergy T300 PS50 and PS25 backup power supplies are designed for long power supply interruption and to maintain control and monitoring of the entire MV substation during outages. Designed to supply all components in the substation including switchgear mechanics and motors. The Easergy PS50 is ideal for isolated sites that are regularly struck by lightning. [3]

- 10 kV insulation and 20 kV surge
- Protected against neutral cutout
- High temperature range: -40° C to 70° C and easy maintenance
- Only a unique battery (PS50 and PS25-12) for easy maintenance and robust lifespan (> 10 years)
- Battery end-of-life monitoring for preventive maintenance

Applications

- Designed for severe environments with a high level of insulation
- Designed for very long outage times
- Easy maintenance with only one battery

Table 5.67: Easergy T300 PS50 and PS25 Backup Power Supplies

Description	Catalog Numbers
Easergy PS25-12V: Power supply and battery charger single 12V 48W output	EMS58585
Easergy PS25-24V: Power supply and battery charger single 24V 48W output	EMS58586
Easergy PS50-24V: Power supply and battery charger 12V and 24V outputs	EMS58587
Easergy PS50-48V: Power supply and battery charger 12V and 48V outputs	EMS58588

[3] Refer to catalog (document number NRJED314621EN) or the Easergy T300 product range for more information.

© 2022 Schneider Electric
All Rights Reserved
9/22/2022