Galaxy PW 2nd Gen

Secure and reliable 3-phase UPS
for industrial applications
3:1: 10-120 kVA
3:3: 10-200 kVA

se.com/ups

Life Is On | Schneider Electric

Reliable power solutions for industrial applications

Industry 4.0 requires a reliable power source and predictable, manageable power protection.

You need a solution that adapts to harsh environments and variable load conditions and applications, and ensures continuous power availability

Customer challenges:

Stable, secure, predictable production schedules are essential, and customers cannot accept the risk of unpredictable equipment operation caused by these issues:

- Complex applications and malware risks
- Environmental factors, such as temperature, humidity, dust, and vibration
- Power quality issues caused by unpredictable harmonics, sags, overvoltages, pulse spikes, overloads, or short circuits
- Complex load types and power conditions, and their effects on each other in the entire power system

Other considerations

Simple Maintenance + Brand + Use Cases

In the face of these challenges, Galaxy PW 2nd Gen is the solution you need.

Galaxy PW 2nd Gen: high reliability and predictability

Galaxy PW 2nd Gen
3:1: 10-120 kVA
3:3: 10-200 kVA

Galaxy PW 2nd Gen with IP31 protection

Applications

- Oil & Gas
- Metals
- Power plants
- Healthcare
- Semiconductor
- Airport
- Food & Beverage
- Marine
- Mining

Exceeds your expectations

Features of Galaxy PW 2nd Gen:

- Allows for complete electrical isolation of the UPS inputs and outputs, with built-in input/output isolation transformer[1]
- Adapts to environments with high dust, high humidity, or corrosive gases, with conformal coating on PCB boards
- Resilient in industrial applications, with built-in IP31 protection and optional IP42 kits
- Standard 40kA lightning protection module
- Upstream and downstream breaker coordination delivered by Schneider Electric circuit breakers
- Increase power system availability and reliability with parallel installation of up to 3+1 UPSs
- Easily manage the UPS, with the standard 7” color touch screen that features intuitive system menus
- Redundant design for critical power components such as controllers
- Full digital signal processor control
- Front access for service

[1] Tranformer is built-in by default:
- 3:1 UPS: input/output transformer
- 3:3 UPS: output transformer only

Schneider Electric has over 60 years of experience in UPS design and production

The next generation of Galaxy PW

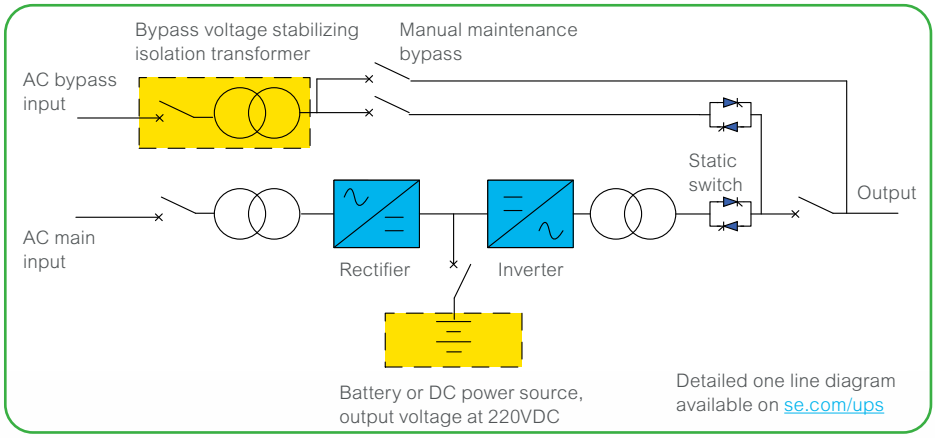

Detailed one line diagram available on se.com/ups

UPS remote monitoring and maintenance

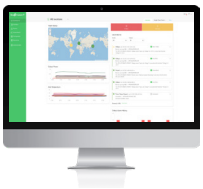

EcoStruxure IT Expert UPS digital management platform

IT Expert gives you one view to proactively monitor and manage your UPS, wherever you are. Gain more than alarms, with full visibility, predictive management, and data-driven recommendations to mitigate security and failure risks for local edge, distributed IT, and data center applications. IT Expert cloud gateway is used to connect the UPS and the IT Expert platform.

IT Expert key features:

- Real-time monitoring
- Multiple notification methods – Tel, SMS, app push, Web pop-up
- Mobile app
- Overview page
- Report
- No networking or VPN required; manage devices anytime and anywhere
- No maintenance required

Fast deployment via IT Expert 4G gateway:

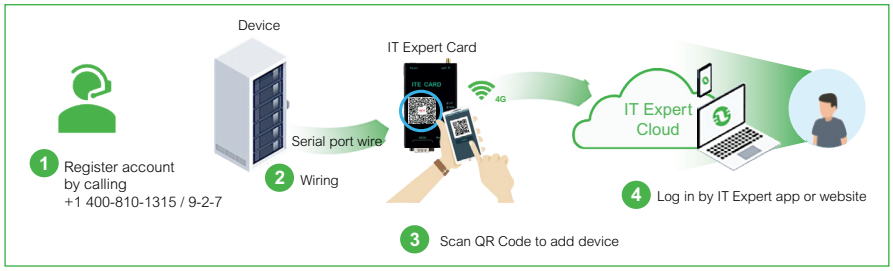

EcoStruxure Asset Advisor remote expert service

Effortlessly manage your IT systems by letting us monitor and detect issues before they happen. Choose between two all-digital, always-on options.

Asset Advisor Services:

- 24/7 expert on-line monitoring
- Event analysis and suggested actions
- Proactive service dispatch
- Monthly consulting report
- Asset Advisor expert call-in line

How to implement:

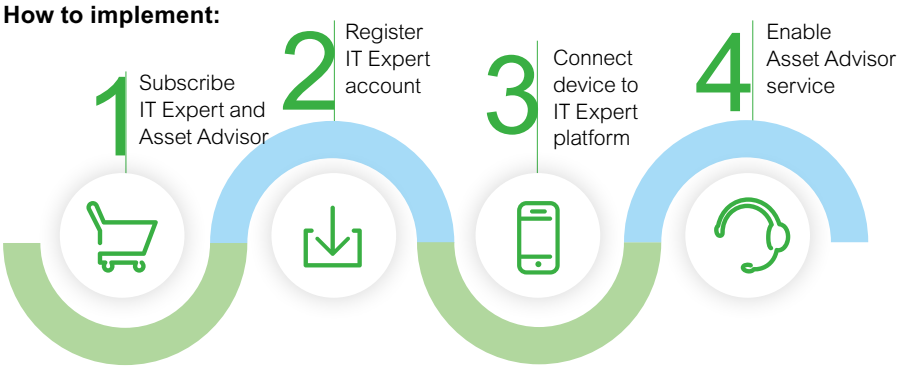

Comprehensive on-site services

Start-up service: included with UPS

- Commission the installation in accordance with manufacturer's recommendations. Ensure optimal system performance from Day 1

Schneider Electric-certified installation services

- Expert configuration of your equipment for optimal performance and reliability

Maintenance services

- Ensure proper care of your mission-critical applications
- Preventive maintenance and response time upgrades, where available

Flexible service plans/ on-site extended warranty

- Hassle-free system maintenance
- Improve uptime at a predictable cost

3:1 UPS Technical Specifications

Capacity (kVA) DC busbar voltage 220V DC	10	20	30	40	50	60	80	100	120
AC main input									
Rectifier architecture	6 and 12 pulse							12 pulse only	
Main input and bypass input	Supports dual inputs								
Rated input voltage	380 / 400 / 415V								
Input voltage range	304 - 456V								
Input frequency range	50Hz+/- 10%								
TVSS	40kA								
Bypass input									
Rated input voltage	220V								
Input voltage range	165 - 275V								
Battery system									
Battery system voltage	220V DC, supports external DC panel								
Cold start	Supports DC cold start								
Output									
Power factor	0.8								
Nominal output voltage and accuracy	220V +/- 1%								
Overload capability	1 min @ 150%								
	10 min @ 125%								
	110% continuous								
Environmental and Equipment Parameters									
Operating temperature	0-40°C								
Humidity	0 – 95%								
Storage temperature	-25°C to 55°C								
Altitude	1000 meters and below without derating								
Communication interface	Modbus RS232/485, standard dry contact; SNMP (optional)								
Standard degree of protection	IP31								
Dimensions									
Depth*Height (mm)	800*1800[1]								
Width (mm)	800				1200			1600	
Standard color	industrial gray (RAL7035)								
Standard									
Safety	IEC62040-1-2017								
Electromagnetic compatibility	IEC61000-4-5								
Battery emissions	IEC62040-2-2018								
Certifications	CE / CB/ type test report / EMC / ROHS2 / Reach / YDT1095-2018								

This height does not include the height of the included IP31 kit. The height with the IP31 kit is 2100mm.

3:3 UPS Technical Specifications

Capacity (kVA) DC busbar voltage 384VDC	10	20	30	40	60	80	100	120	160	200
AC main input										
Rectifier architecture	6 pulse only						12 pulse only			
Main input and bypass input	dual inputs									
Rated input voltage	380 / 400 / 415V									
Input voltage range	304 - 456V									
Input frequency range	50Hz+/- 10%									
TVSS	40kA									
Bypass input										
Rated input voltage	380 / 400 / 415V									
Input voltage range	285 - 475V									
Battery										
Battery voltage	384V DC adjustable									
Cold start	Supports DC cold start									
Output										
Power factor	0.8									
Nominal output voltage and accuracy	+/- 1%									
Overload capability	1 min @ 150%									
	10 min @ 125%									
	110% continuous									
Environmental and Equipment Parameters										
Operating temperature	0-40°C									
Humidity	0 – 95%									
Storage temperature	-25°C to 55°C									
Altitude	1000 meters and below without derating									
Communication interface	Modbus RS232/485, standard dry contact; SNMP (optional)									
Standard degree of protection	IP31									
Dimensions										
Depth*Height (mm)	800*1800[1]									
Width (mm)	800						1200		1600	
Standard color	industrial gray (RAL7035)									
Standard										
Safety	IEC62040-1-2017									
Electromagnetic compatibility	IEC61000-4-5									
Battery emissions	IEC62040-2-2018									
Certifications	CE / CB/ type test report / EMC / ROHS2 / Reach / YDT1095-2018									

This height does not include the height of the included IP31 kit. The height with the IP31 kit is 2100mm.

Life Is On | Schneider Electric

To learn more about the Galaxy PW 2nd Gen 3-phase uninterruptible power supply (UPS), EcoStruxure IT cloud-based DCIM, and EcoStruxure Asset Advisor 24x7 Digital Monitoring Services, contact your Schneider Electric representative or visit se.com/ups

About Schneider Electric At Schneider Electric, we believe access to energy and digital is a basic human right. We empower all to make the most of their energy and resources, ensuring Life Is On everywhere, for everyone, at every moment. We provide energy and automation digital solutions for efficiency and sustainability. We combine world-leading energy technologies, real-time automation, software and services into integrated solutions for Homes, Buildings, Data Centers, Infrastructure and Industries. We are committed to unleash the infinite possibilities of an open, global, innovative community that is passionate about our Meaningful Purpose, Inclusive and Empowered values. www.se.com

Schneider Electric Industries SAS
35 Rue Joseph Monier – CS 30323
92506 Rueil-Malmaison, France

© 2023 Schneider Electric. All Rights Reserved. Life Is On Schneider Electric is a trademark and the property of Schneider Electric SE, its subsidiaries and affiliated companies.
998-22063251-GMA