Spacial SF Supplied as a Kit
Width 1600mm / 62,99 in

Spacial SF Fourni en Kit
Large 1600mm / 62,99 in

Spacial SF Suministrado en Kit
Ancho 1600mm / 62,99 in

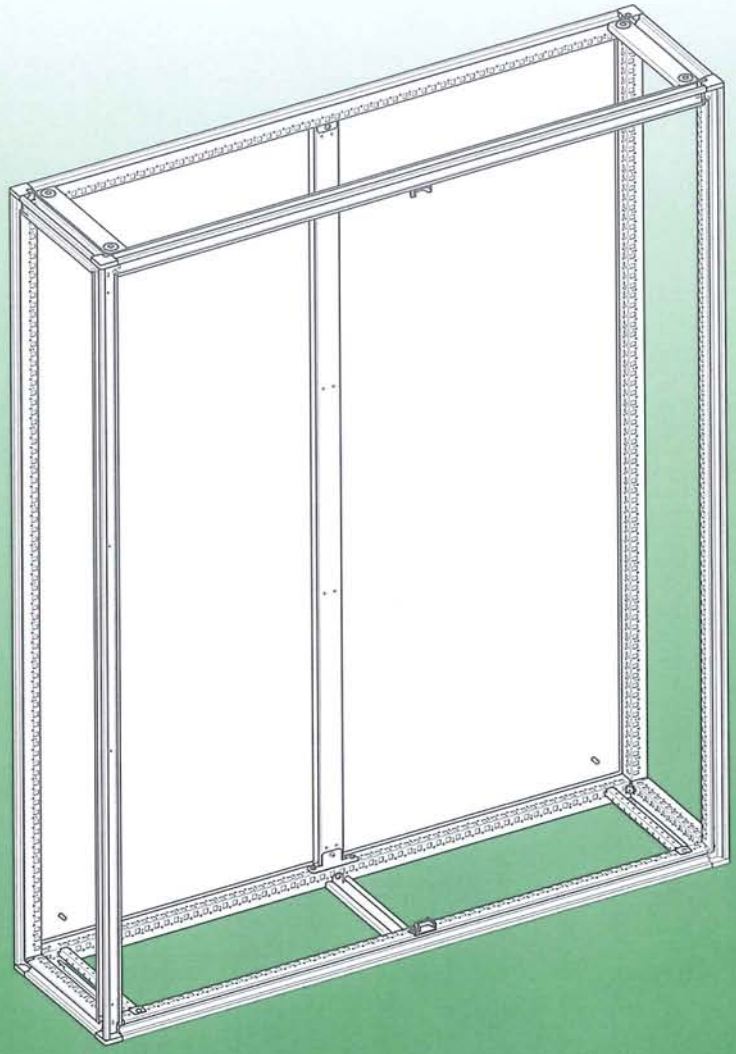

type 1	type 2	type 3	type 4
M8	diam. 8	M6	M6/T30
37 Nm		3 Nm	3 Nm
327,45 lb-in		26,55 lb-in	26,55 lb-in

Schneider Electric

Released for Manufacturing
Printed on 2013/04/22

Width/Large/Ancho
1600mm
62,99in

A

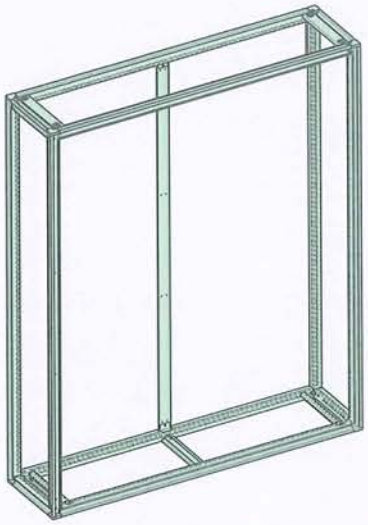

1 type 4 (x2)

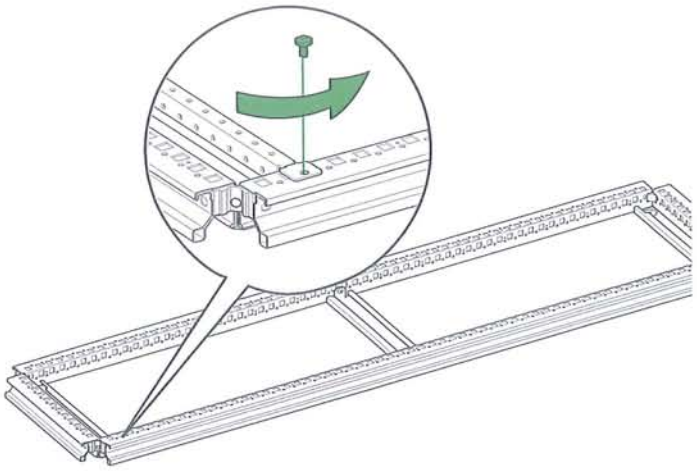

2

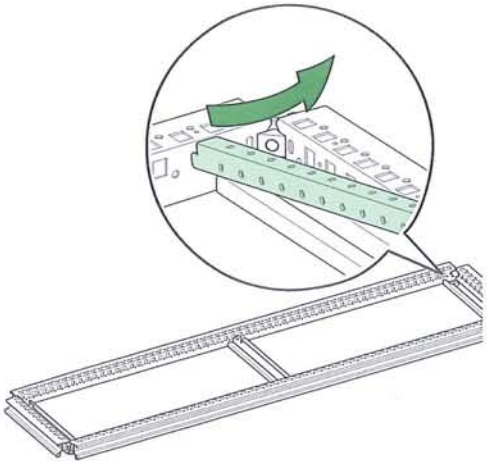

3

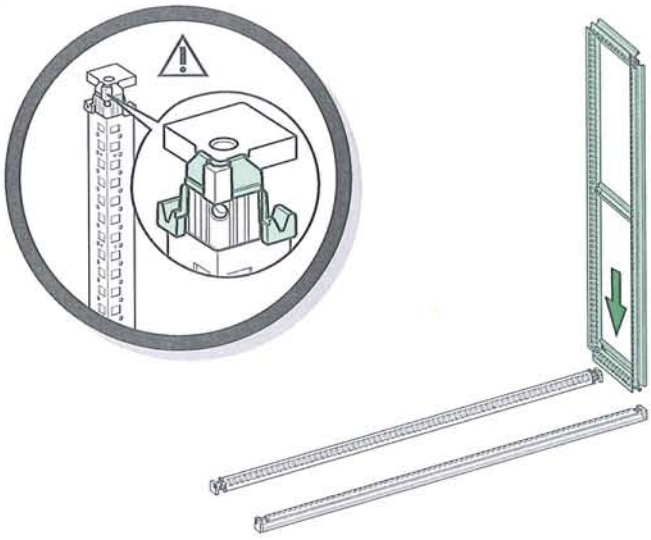

4

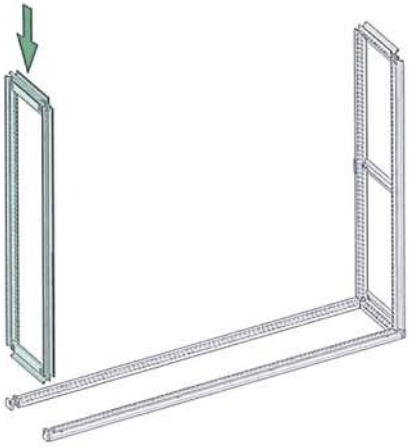

5 type 1 / type 2 (x4)

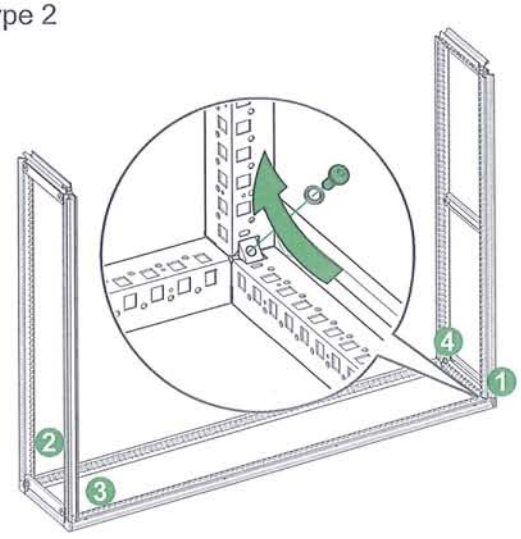

Released for Manufacturing
Printed on 2013/04/22

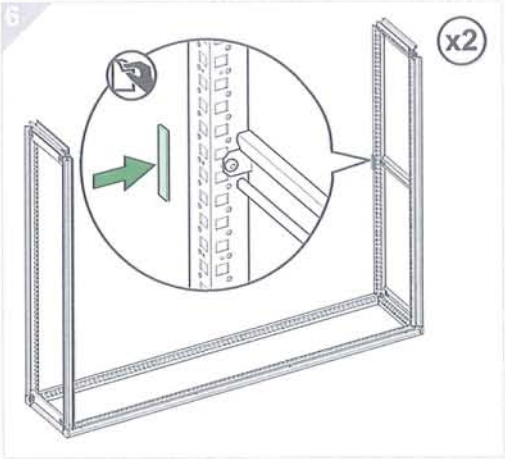

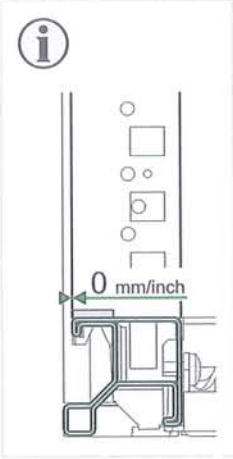

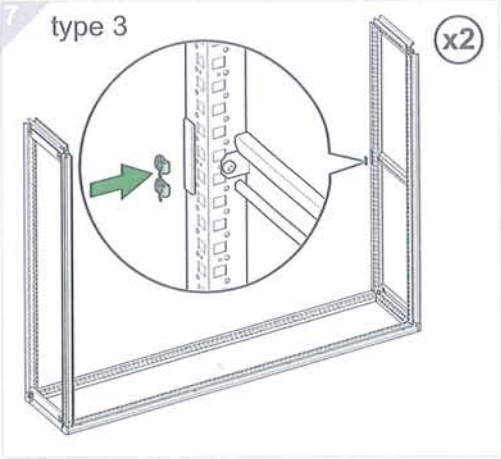

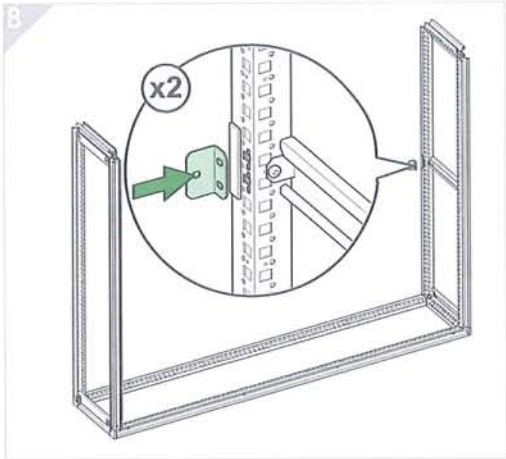

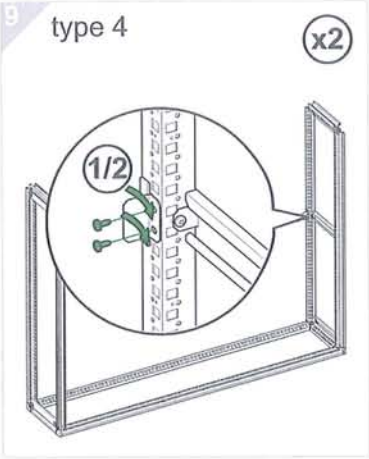

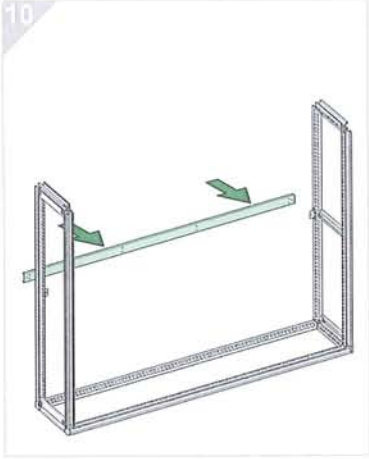

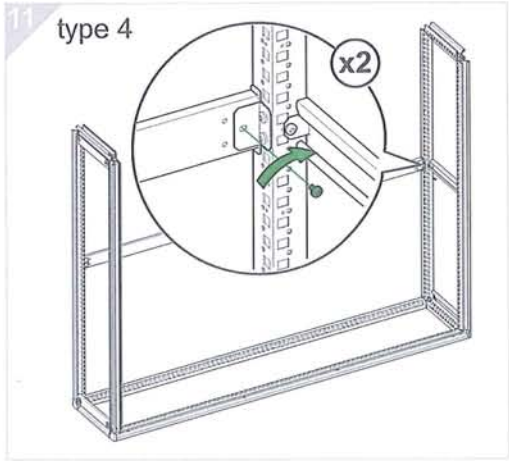

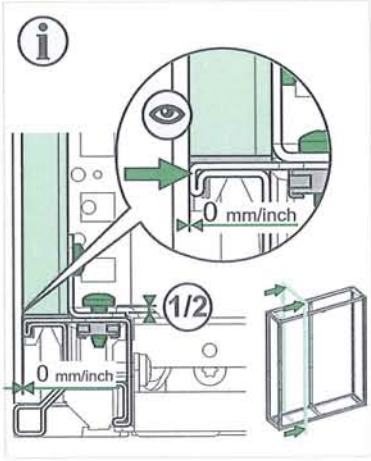

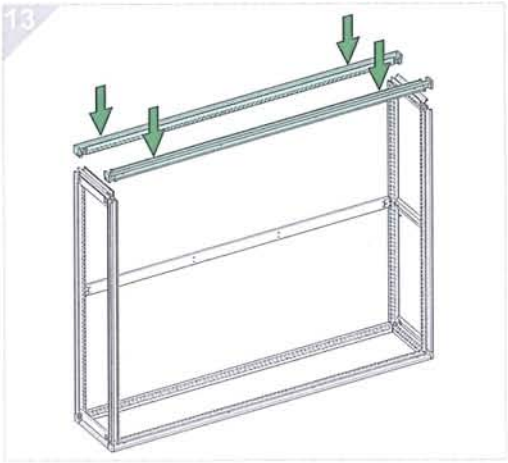

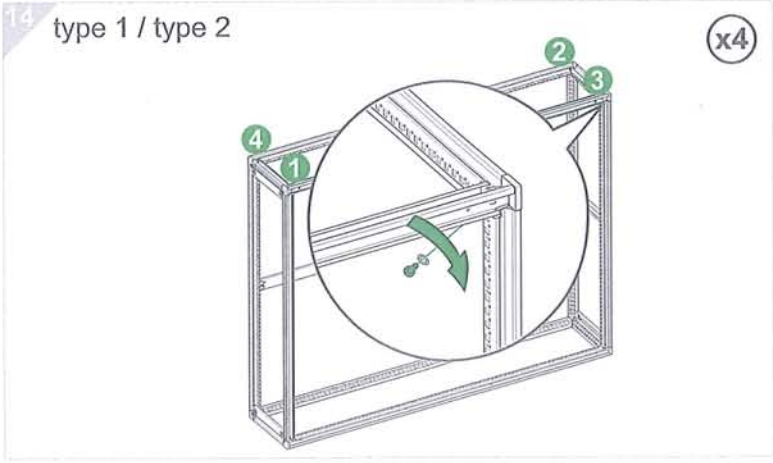

Released for Manufacturing
Printed on 2013/04/22

15

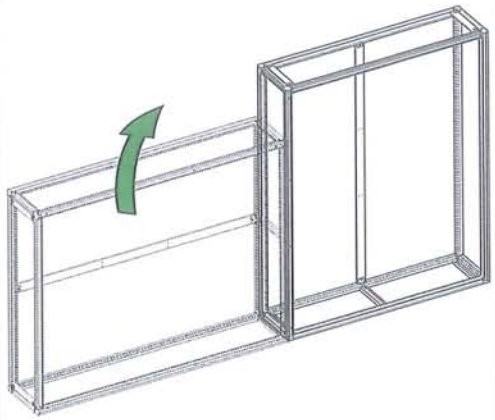

16 type 4

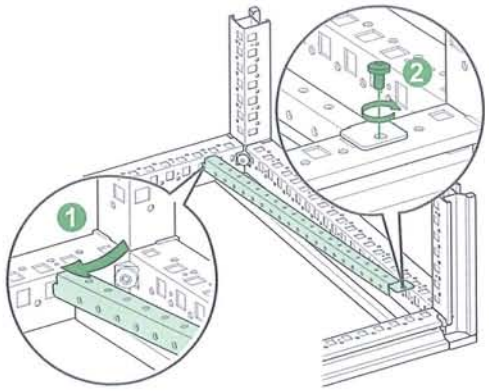

Width/Large/Ancho
1600mm
62,99in

A

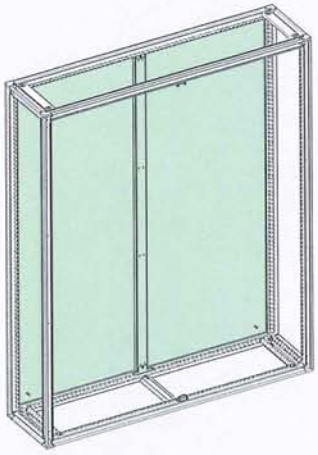

1

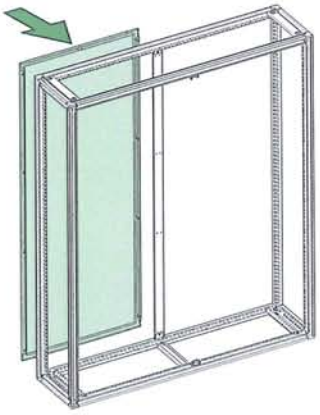

2

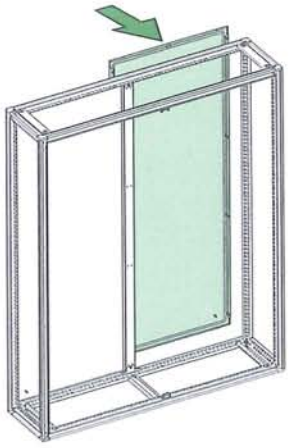

3

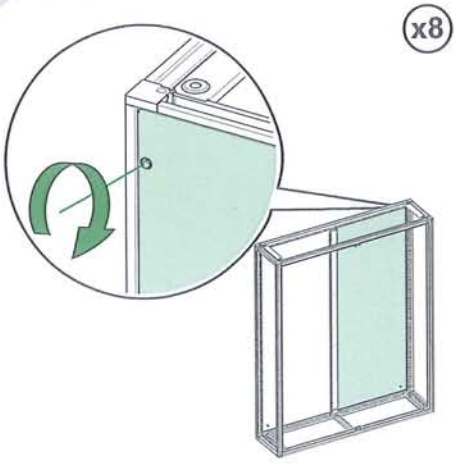

4

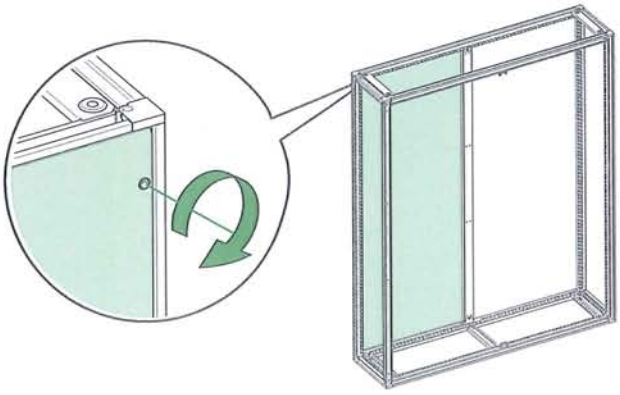

HHH7314330001

Ce document a été imprimé sur du papier écologique.
This document has been printed on ecological paper.

27/05/2010

Released for Manufacturing
Printed on 2013/04/22