Product data sheet

Specifications

Discontinued

IP67 passive splitter box - M23 connector - with 8 channels M12 connector

ABE9C1280C23

Discontinued on: Sep 15, 2023

End-of-service on: Dec 31, 2024

Product availability: Non-Stock - Not normally stocked in distribution facility

Main

Range of Product	Advantys ABE9
Product or Component Type	IP67 passive splitter box
Number of Channels	8
Electrical connection	1 male connector M23 19 pins 8 female connectors M12 5 pins
Status LED	Without

Complementary

Number of ways	16 ways
[Ue] rated operational voltage	24 V DC
Current per channel	4 A
Insulation group	Category 3 VDE 0110
Operating position	Any position
Fixing Mode	M4 screw fixing
Contact resistance	5000 µOhm
Current of common	16 A 0.002 in² (1 mm²) 12 A 0.001 in² (0.75 mm²)
Separation of commons	Without
Net Weight	0.31 lb(US) (0.14 kg)

Environment

IP degree of protection	IP67 conforming to IEC 60529
Product Certifications	cULus
Ambient air temperature for operation	-4…176 °F (-20…80 °C)
Ambient Air Temperature for Storage	-40…185 °F (-40…85 °C)
Vibration resistance	0.2 gn (f= 57…150 Hz) conforming to IEC 68-2-6, FC tests
Shock resistance	30 gn 11 ms IEC 68-2-2

Ordering and shipping details

Category	US1PC3218218

Price is “List Price” and may be subject to a trade discount – check with your local distributor or retailer for actual price.

Disclaimer: This documentation is not intended as a substitute for and is not to be used for determining suitability or reliability of these products for specific user applications

Discount Schedule	PC32
GTIN	3389110404753
Returnability	No
Country of origin	DE

Packing Units

Unit Type of Package 1	PCE
Nbr. of units in pkg.	1
Package 1 Height	1.8 in (4.6 cm)
Package 1 Width	2.2 in (5.7 cm)
Package 1 Length	6.1 in (15.5 cm)
Package weight(Lbs)	5.9 oz (168.0 g)
Unit Type of Package 2	S03
Number of Units in Package 2	60
Package 2 Height	11.8 in (30.0 cm)
Package 2 Width	11.8 in (30.0 cm)
Package 2 Length	15.7 in (40.0 cm)
Package 2 Weight	23.440 lb(US) (10.632 kg)

Contractual warranty

Warranty (in months)	18

Environmental Data

Schneider Electric aims to achieve Net Zero status by 2050 through supply chain partnerships, lower impact materials, and circularity via our ongoing “Use Better, Use Longer, Use Again” campaign to extend product lifetimes and recyclability.

Environmental Data explained

How we assess product sustainability

Use Better

Materials and Substances

EU RoHS Directive	**Pro-active compliance (Product out of EU RoHS legal scope)**
SCIP Number	**93c35204-c30d-4a1c-be25-b7657ea12b91**
REACh Regulation	**REACh Declaration**
California proposition 65	**WARNING: This product can expose you to chemicals including: Lead and lead compounds, which is known to the State of California to cause cancer and birth defects or other reproductive harm. For more information go to www.P65Warnings.ca.gov**

Use Again

Repack and remanufacture

WEEE Label	**The product must be disposed on European Union markets following specific waste collection and never end up in rubbish bins.**

Dimensions Drawings

Dimensions

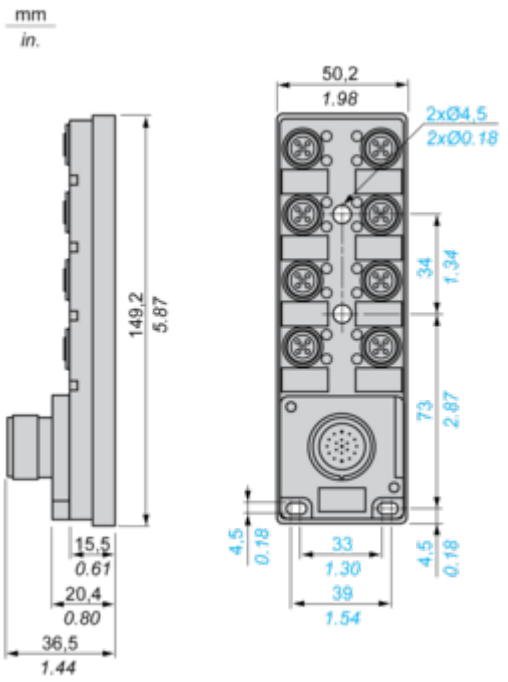

Connections and Schema

Wiring Diagram

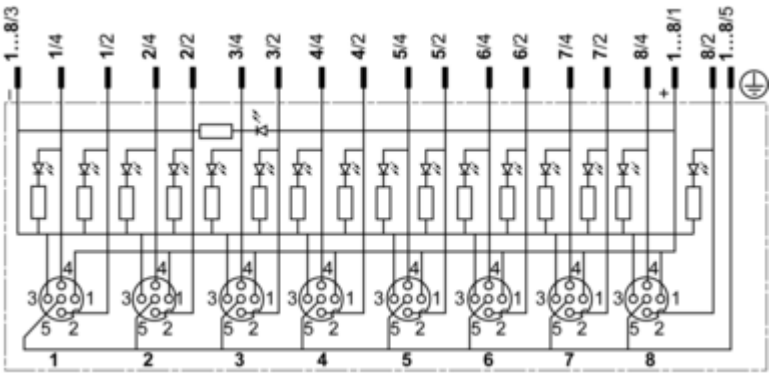

Item	M23 connector contact
1/4	15
1/2	7
2/4	5
2/2	4
3/4	16
3/2	8
4/4	3
4/2	14
5/4	17
5/2	9
6/4	2
6/2	13
7/4	11
7/2	10
8/4	1
8/2	18
1, 3, 5 & 7/1	19
2, 4, 6 & 8/1	19
1, 3, 5 & 7/3	6

Item	M23 connector contact
2, 4, 6 & 8/3	6
1…8/5	12
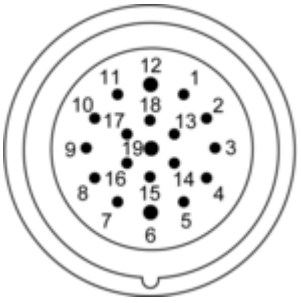
M23 Connector