Air Gap Installation Instructions

Watts Air Gap Drains are designed to collect water that is being discharged by the relief valve, due to minor check valve fouling and/or line pressure fluctuations.

Note: Air Gap Drains are not designed to collect the full discharge capacity of the relief valve.

Series 957 and 957RPDA Air Gaps

Sizes: 2½" – 10" (65 – 250mm)

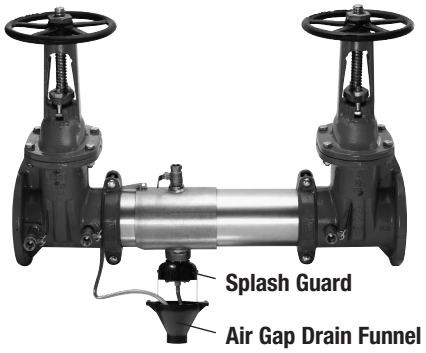

1. Remove L shape bracket from one side of air gap drain.
2. Remove screw from one side of the splash guard.
3. Slide one half of the splash guard into the groove on the relief valve body.
4. Slide the other half of the splash guard into the groove on the relief valve body and reassemble the two parts together.
5. Reattach the L shape brackets long side up into slots in the splash guard with screws.
6. Push as much of the sensing hose as possible into the air gap drain funnel to prevent over spray.

Series 994 and 994RPDA Air Gaps

Sizes: 2½" – 10" (65 – 250mm)

Horizontal

1. Remove two of the relief valve capscrews 180° apart.
2. Remove the relief valve hose from fitting below inlet ball valve.
3. From the top of the air gap, thread the relief valve hose down and out the slot.
4. Use ¼: - 20 UNC x 1" long stainless steel screws.
5. Reconnect relief valve hose to the fitting below the inlet ball valve (Fig. 1).

Vertical

1. Detach the sensing line from the inlet ball valve and the elbow on the relief valve.
2. Remove the elbows from the relief valve base.
3. Hang the Air Gap Drain on the body of the relief valve (Fig. 2).
4. Reinstall the elbow into the base of the relief valve to hold the Air Gap Drain in place.
5. Install the rigid fitting end of the sensing line to the elbow on the base of the relief valve and the swivel end to the fitting on the ball valve.

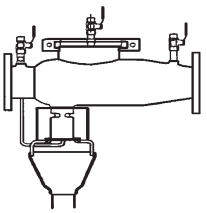

Fig. 1

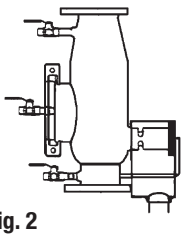

Fig. 2

WATTS®

Series 009, 909, 909RPDA and 919 Air Gaps

Sizes: ¼" – 10" (8 – 250mm)

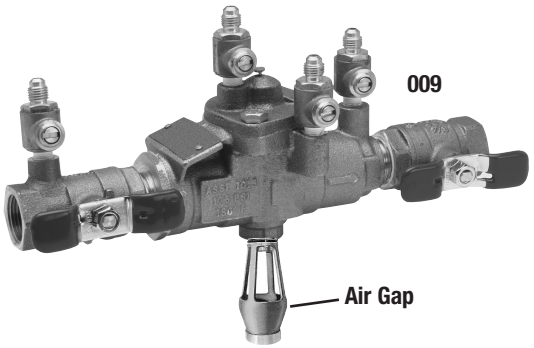

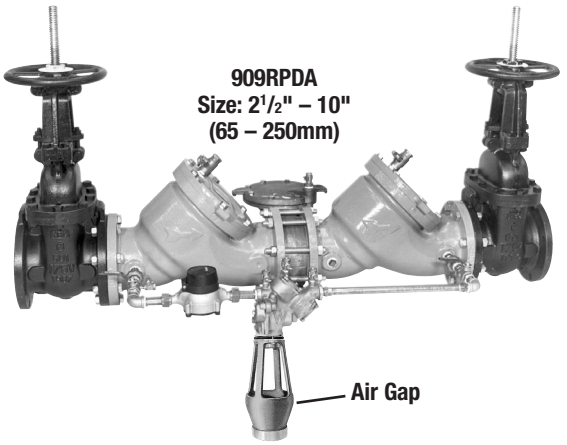

1. Air Gap installs easily to the bottom of the 009, 909, 909RPDA and 919 backflow assembly relief valve.
2. Attach to the outlet of the relief valve using screws.
3. For vertical installations use optional elbows as shown below.

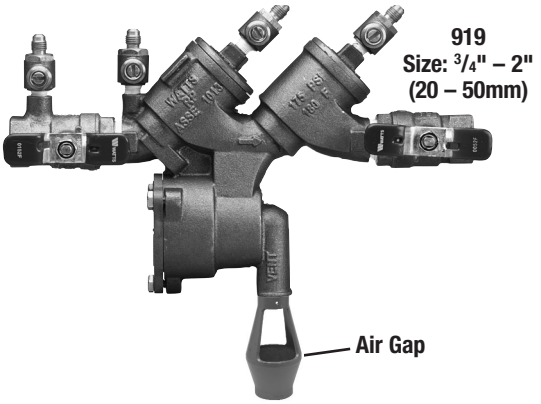

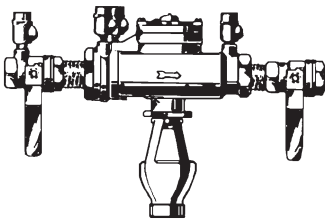

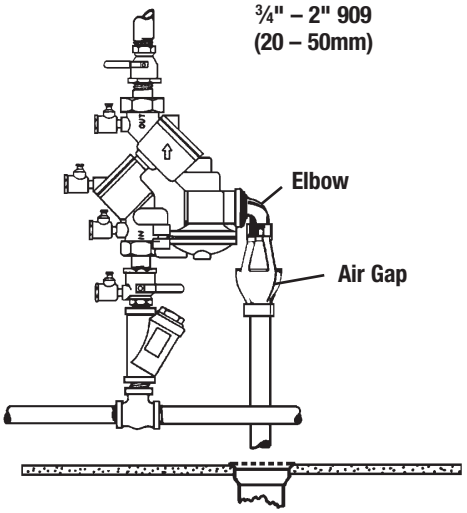

CALIFORNIA PROPOSITION 65 WARNING

WARNING: This product contains chemicals known to the State of California to cause cancer and birth defects or other reproductive harm.
(California law requires this warning to be given to customers in the State of California.)

For more information: www.watts.com/prop65

Limited Warranty: Watts Regulator Co. (the "Company") warrants each product to be free from defects in material and workmanship under normal usage for a period of one year from the date of original shipment. In the event of such defects within the warranty period, the Company will, at its option, replace or recondition the product without charge.
THE WARRANTY SET FORTH HEREIN IS GIVEN EXPRESSLY AND IS THE ONLY WARRANTY GIVEN BY THE COMPANY WITH RESPECT TO THE PRODUCT. THE COMPANY MAKES NO OTHER WARRANTIES, EXPRESS OR IMPLIED. THE COMPANY HEREBY SPECIFICALLY DISCLAIMS ALL OTHER WARRANTIES, EXPRESS OR IMPLIED, INCLUDING BUT NOT LIMITED TO THE IMPLIED WARRANTIES OF MERCHANTABILITY AND FITNESS FOR A PARTICULAR PURPOSE.
The remedy described in the first paragraph of this warranty shall constitute the sole and exclusive remedy for breach of warranty, and the Company shall not be responsible for any incidental, special or consequential damages, including without limitation, lost profits or the cost of repairing or replacing other property which is damaged if this product does not work properly, other costs resulting from labor charges, delays, vandalism, negligence, fouling caused by foreign material, damage from adverse water conditions, chemical, or any other circumstances over which the Company has no control. This warranty shall be invalidated by any abuse, misuse, misapplication, improper installation or improper maintenance or alteration of the product.
Some States do not allow limitations on how long an implied warranty lasts, and some States do not allow the exclusion or limitation of incidental or consequential damages. Therefore the above limitations may not apply to you. This Limited Warranty gives you specific legal rights, and you may have other rights that vary from State to State. You should consult applicable state laws to determine your rights. **SO FAR AS IS CONSISTENT WITH APPLICABLE STATE LAW, ANY IMPLIED WARRANTIES THAT MAY NOT BE DISCLAIMED, INCLUDING THE IMPLIED WARRANTIES OF MERCHANTABILITY AND FITNESS FOR A PARTICULAR PURPOSE, ARE LIMITED IN DURATION TO ONE YEAR FROM THE DATE OF ORIGINAL SHIPMENT.**

WATTS®

ISO 9001-2000 CERTIFIED

Backflow Prevention Products

USA: 815 Chestnut St., No. Andover, MA 01845-6098; www.watts.com
Canada: 5435 North Service Rd., Burlington, ONT. L7L 5H7; www.wattscanada.ca

© Watts, 2008