Engineering Specification

Job Name _____ Contractor _____

Job Location _____ Approval _____

Engineer _____ Contractor's P.O. No. _____

Approval _____ Representative _____

Freeze Sensor Connection Kit

FOR SELECT WATTS AND FEBCO ASSEMBLIES OR STANDALONE OUTDOOR OPERATION

⚠ WARNING

Freeze sensor solely provides alerts about a possible freeze event and cannot prevent a freeze event from occurring. User action is required to prevent freeze conditions from causing product and/or property damage.

SentryPlus Alert® Freeze Sensor Connection Kit for activating a valve-mounted or standalone outdoor sensor and triggering alerts at low and freezing temperatures. Compatible with building management systems, irrigation management systems, and Wi-Fi networks.

Features

- Built-in Wi-Fi function to communicate freeze alerts directly to the user, eliminating the need for a third-party controller
- Included standalone sensor to provide flexibility in locating a measuring tool at or near any water-carrying outdoor installation vulnerable to freezing conditions
- Switched output relay to supplement BMS or irrigation management systems with reinforced control of sprinkler systems

Contents

Freeze sensor in mounting clip

Standalone outdoor sensor

Activation module

Wire nuts (2)

DC 24 V power adapter

Quick Start Guide

NOTICE

Use of the freeze sensor does not replace the need to comply with all required instructions, codes, and regulations related to installation, operation, and maintenance of this product, including the need to provide protection against a freeze event.

Watts is not responsible for the failure of alerts due to connectivity issues, power outages, or improper installation.

For the following assembly series, sizes ½" to 2".

Call customer service if you need assistance with technical details.

Watts	FEBCO
007	765
007M1DCDA	850 Small
800M4FR	LF850 Small
800M4QT	
LF007	
LF800M4FR	
LF800M4QT	
SS007	

NOTICE

The information contained herein is not intended to replace the full product installation and safety information available or the experience of a trained product installer. You are required to thoroughly read all installation instructions and product safety information before beginning the installation of this product.

Watts product specifications in U.S. customary units and metric are approximate and are provided for reference only. For precise measurements, please contact Watts Technical Service. Watts reserves the right to change or modify product design, construction, specifications, or materials without prior notice and without incurring any obligation to make such changes and modifications on Watts products previously or subsequently sold.

Wiring Schematic

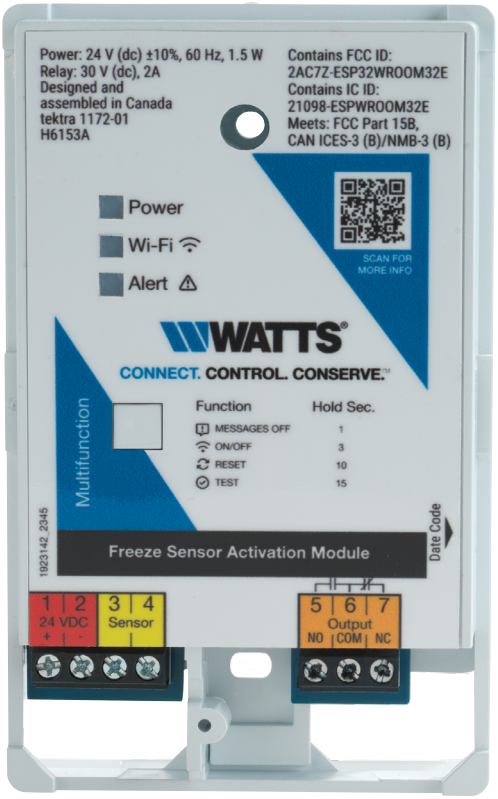

24 VDC INPUT	SENSOR INPUT	OUTPUT RELAY
Input terminals for power adapter; the positive wire to terminal 1 and the ground wire to terminal 2.	Input terminals for sensor cable; one wire to terminal 3 and the other wire to terminal 4.	Output terminals for the third-party BMS or IMS cable; one wire to COM terminal 6 and the other wire to either NO terminal 5 or NC terminal 7.

Operation

The SentryPlus Alert system monitors temperature and alerts facility personnel when freeze conditions can cause damage to equipment. The Freeze Sensor Connection Kit includes two temperature sensors, allowing the user to choose the one more suitable for installation. One sensor can be mounted to a valve assembly; the other, installed outdoors as a standalone unit. (The valve-mounted sensor does not alter valve functions or certifications.)

When the kit is installed with either sensor, the sensor is activated and wired to a monitoring system. As temperature measurements fall below 37°F and below 32°F, the monitoring system relays a signal to a connected building or irrigation management system, allowing freeze alerts to be distributed according to the BMS or IMS application. When the monitoring system is Wi-Fi enabled, notifications can be issued through the Smart Freeze Alert cloud service (included).

Specification

The connection kit shall be capable of activating the valve-mounted sensor or the standalone outdoor sensor. The activation module shall include Wi-Fi function.

When the kit is installed with either sensor, the sensor shall be activated and wired to a monitoring system. As temperature measurements fall below 37°F and below 32°F, the monitoring system shall relay a signal to a connected building or irrigation management system, allowing freeze alerts to be distributed according to the BMS or IMS application. When the monitoring system is Wi-Fi enabled, notifications shall be issued through the Smart Freeze Alert cloud service (included).

The connection kit shall include freeze sensor in mounting clip, tekmar Outdoor Sensor 070, activation module, two wire nuts, and power adapter. The kit shall be purchased separately from any valve assembly.

Activation Module

The mountable activation module contains the electronic circuit assembly, interfaces with the valve-mounted sensor or the outdoor sensor, provides connectivity to the BMS or the irrigation management system input terminal, and is compatible with Wi-Fi networks. Size: 3.00" W x 4.75" H x 0.75 D. Weight: 0.2 lb.

- LEDs indicate the status of power to the unit, Wi-Fi, and alerts.
- Multifunction button contains four operations: Messages OFF, Wi-Fi ON/OFF, Reset, and Test.
- Programmed with two thresholds to alert the user when temperature measurements fall below 37°F and below 32°F.
- Designed with Wi-Fi function to transmit messaging directly to the user, through the Smart Freeze Alert cloud service (included). Messaging can be silenced without disabling the Wi-Fi function.

For more information, refer to IS-FZSensorConnectionKit at watts.com.

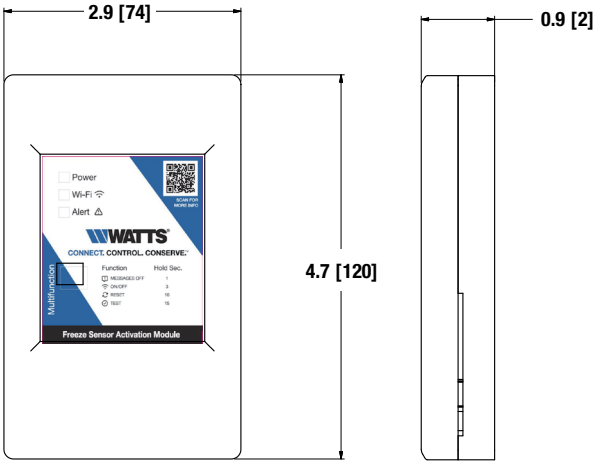

Valve-mounted Freeze Sensor

Thermistor in a mounting clip for attachment to the test cock of a valve assembly. Total weight of sensor and clip: <0.5 lb.

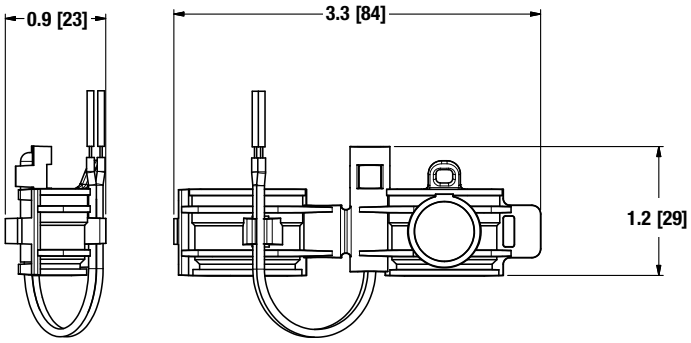

Standalone Outdoor Sensor

NTC thermistor built into compact, UV resistant enclosure for outdoor installation. For more information, refer to tekmar Outdoor Sensor 070 at watts.com.

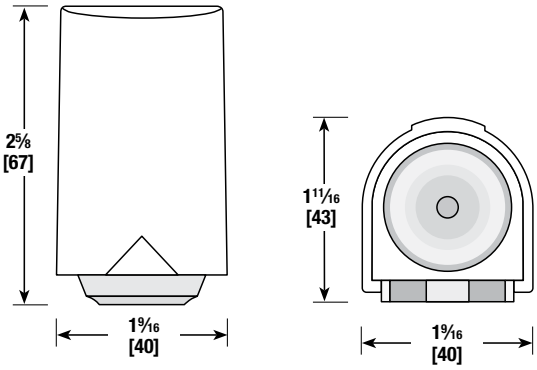

Wire Nuts

Two twist-on wire cap connectors

14 to 22 AWG

Power Adapter

Output DC voltage	24V ±2.0%
Output current range	0 ~ 1.04A
Input voltage range	90 ~ 264VAC
Input frequency range	47 ~ 63Hz
Input AC current	0.65A/115VAC 0.25A/230VAC

USA: T: (978) 689-6066 • Watts.com
Canada: T: (888) 208-8927 • Watts.ca
Latin America: T: (52) 55-4122-0138 • Watts.com

© 2024 Watts