Engineering Specification

Job Name _____ Contractor _____

Job Location _____ Approval _____

Engineer _____ Contractor's P.O. No. _____

Approval _____ Representative _____

LEAD FREE*

Series 77F-DI-125, 77F-DI-FDA-125

Flanged, Wye Pattern, Cast Iron Strainers

Sizes: 2" – 12"

77F-DI-FDA-125

Series 77F-DI-125, 77F-DI-FDA-125 Flanged, Wye Pattern, Cast Iron Strainers feature 304 stainless steel perforated screens, a cast iron flanged retainer cap and a drain/blowoff connection furnished with a closure plug. Series 77F-DI-FDA-125 also features a double coated, heat fused epoxy coating on the interior and exterior for FDA approved sanitary applications.

Features

- Flanges conform to American National Standards Institute, Class 125 (ANSI B16.1) and WW-S-2739 Type 2
- Lead Free* cast iron body
- 304 Stainless steel perforated screens
- Cast iron flanged retainer cap with gasket tapped for closure plug
- Drain/Blowoff connection furnished with closure plug
- Series 77F-DI-FDA-125 comes with heat fused FDA approved epoxy coating (interior and exterior)

Models

77F-DI-125 — 2" – 12" with flanged connections for water and steam service

77F-DI-FDA-125 — 2" – 12" with flanged connections and double coated, heat fused FDA approved epoxy coating (interior and exterior) for water service only

Specifications (77F-DI-125)

A flanged, wye pattern, cast iron strainer to be installed as indicated on the plans. The strainer must have flanges that conform to American National Standards Institute, Class 125, 304 stainless steel perforated screens and a drain/blowoff connection furnished with a closure plug. Pressure rating no less than 200psi (13.8 bar) WOG non-shock and 125psi (8.6 bar) WSP. Strainer shall be a Watts Series 77F-DI-125.

***The wetted surface of this product contacted by consumable water contains less than 0.25% of lead by weight.**

Pressure – Temperature

Maximum Operating Pressure:

200psi (13.8 bar) WOG, non-shock, @ 210°F (99°C)

125psi (8.6 bar) WSP @ 353°F (178°C)

Standard Screens

2" – 5": $^{1}/_{16}$" perforation
6" – 8": $^{1}/_{8}$" perforation
10" – 12": $^{3}/_{16}$" perforation

Screen Options

Wire Mesh Liners: 304 stainless steel (#20, #40, #60, #80, #100)
Perforated Screens: 304 stainless steel ($^{3}/_{64}$", $^{1}/_{16}$", $^{1}/_{8}$", $^{3}/_{16}$")

Specifications (77F-DI-FDA-125)

A flanged, wye pattern, cast iron strainer with a double coated, heat fused, FDA approved epoxy coating on the interior and exterior surfaces for FDA sanitary applications. Flanges to conform to ANSI B16.1 Class 125, 304 stainless steel perforated screens, and a drain/blowoff connection furnished with a closure plug. Pressure rating 200psi (13.8 bar) WOG. Strainer shall be a Watts Series 77F-DI-FDA-125.

NOTICE

The information contained herein is not intended to replace the full product installation and safety information available or the experience of a trained product installer. You are required to thoroughly read all installation instructions and product safety information before beginning the installation of this product.

Watts product specifications in U.S. customary units and metric are approximate and are provided for reference only. For precise measurements, please contact Watts Technical Service. Watts reserves the right to change or modify product design, construction, specifications, or materials without prior notice and without incurring any obligation to make such changes and modifications on Watts products previously or subsequently sold.

WATTS®

Materials

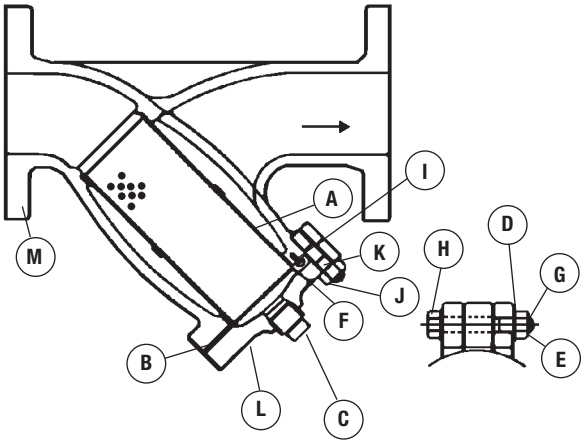

A.	Screen	AISI 304SS
B.	Cover Gasket	Graphite
C.	Plug	*ASTM A47
D.	Washer	ASTM A6
E.	Cotter Pin	ASTM A112
F.	Plate	*ASTM A6
G.	Bolt Nut	ASTM A6
H.	Bolt	ASTM A6
I.	Set Screw	ASTM B16
J.	Cover Bolt Nut	ASTM A6
K.	Cover Bolt	ASTM A6
L.	Cover	*ASTM A-126 Class B
M.	Body	*ASTM A-126 Class B

Note:* 77F-DI-FDA-125 component parts epoxy coated internally and externally.

Flow/Pressure Drop Chart

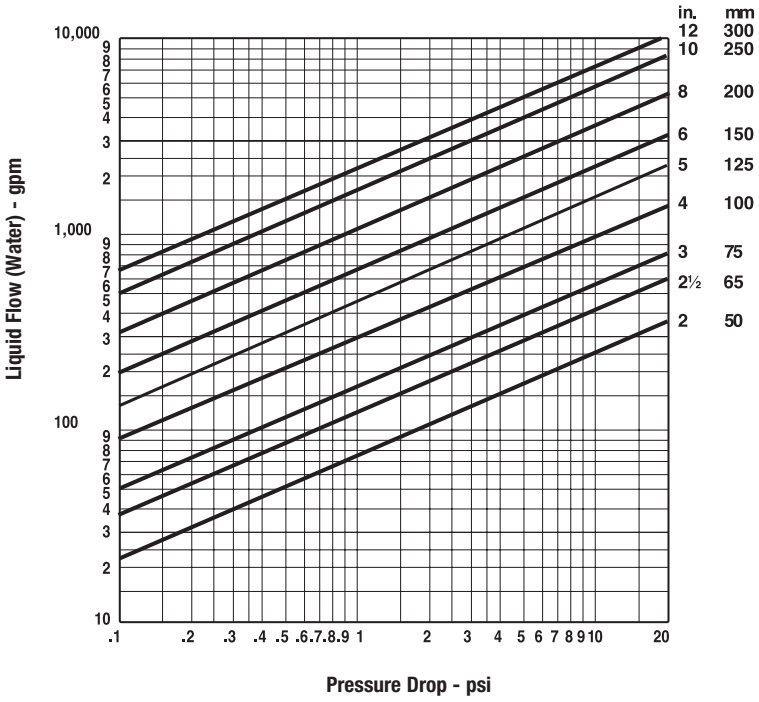

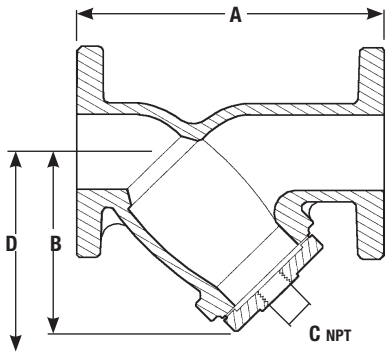

Standards

Tested and Certified by NSF International

NSF Certified to NSF/ANSI 372

Dimensions – Weights

SIZE	DIMENSIONS									WEIGHT	
	A		B		C(NPT)		D*		Screen Area		
in.	*in.*	*mm*	*in.*	*mm*	*in.*	*mm*	*in.*	*mm*	*sq.in.*	*lbs.*	*kgs.*
2	7⅞	200	5¼	133	½	13	7	178	36	18	8
2½	10	254	6½	165	1	25	9¾	248	56	28	13
3	10⅛	257	7	178	1	25	10	254	75	34	15
4	12⅛	308	8¼	210	1½	38	12	305	121	60	27
5	15⅝	397	11¼	286	2	51	17	432	210	95	43
6	18½	470	13½	343	2	51	20	508	278	133	60
8	21⅝	551	15½	394	2	51	22¾	578	387	247	112
10	26	660	18½	470	2	51	28	711	577	370	168
12	29⅞	759	21¾	552	2	51	30	762	795	579	262

* D dimension is minimum clearance for screen removal.

USA: T: (978) 689-6066 • F: (978) 975-8350 • Watts.com
Canada: T: (888) 208-8927 • F: (905) 332-7068 • Watts.ca
Latin America: T: (52) 55-4122-0138 • Watts.com

© 2021 Watts