Fire-Rated OxBox™

Installation Guide | Guía de Instalación | Guide d'Installation

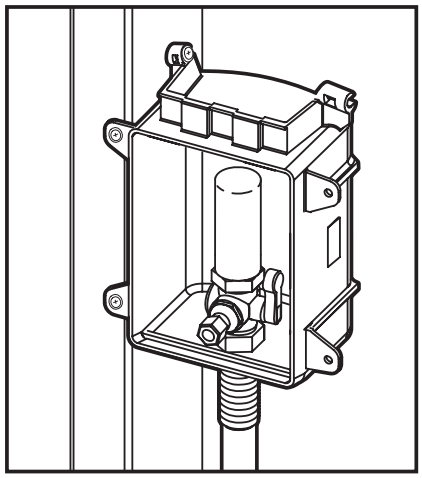

Conforms to ASTM E-814
– 2 hrs. (F) , 1.5 hrs. (T)
Conforms to ASTM E-119
Package includes factory-installed intumescent pads.

Ajuste a ASTM E-814
– 2 hrs. (F) , 1.5 hrs. (T)
Ajuste a ASTM E-119
El paquete incluye almohadilla intumescentes instaladas por la fabrica.

Installation on Stud | *Instalación en Montante de Madera* | *Installation au Montant*

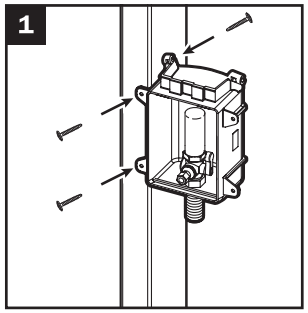

Secure assembly to stud

Asegure la asamblea al puntal

Fixer l'assemblage au montant

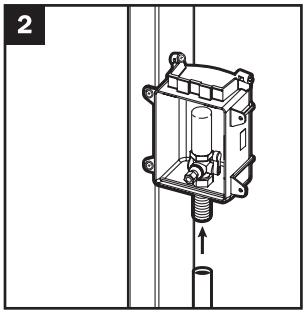

Connect supply line according to industry standards. Open valves before any soldering

Conecte línea de alimentación de acuerdo a los estándares de industria. Abra la válvula antes de soldar

Raccorder le conduite d'alimentation selon les normes de l'industrie. Ouvrir le robinet avant toute soudure

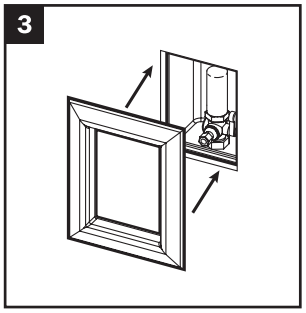

Install frame after wall finish

Instale marco después de acabado de pared

Installer le cadre après la finition du mur

Installation Between Studs | *Instalación Entre de los Maderas* | *Installation Entre les Montants*

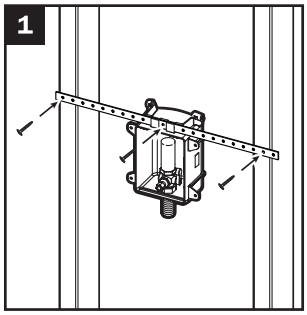

Slide bracket into top track and secure bracket to studs

Deslice soporte hacia riel de arriba y asegure la soporte a los maderas

Faites glisser le support dans la partie supérieure et fixer l'assemblage au montant

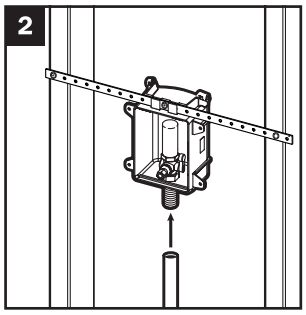

Connect supply line according to industry standards. Open valves before any soldering

Conecte línea de alimentación de acuerdo a los estándares de industria. Abra la válvula antes de soldar

Raccorder le conduite d'alimentation selon les normes de l'industrie. Ouvrir le robinet avant toute soudure

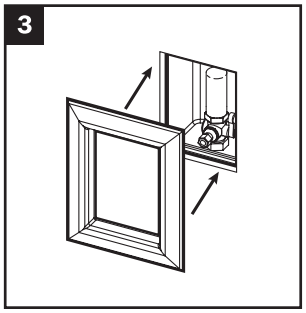

Install frame after wall finish

Instale marco después de acabado de pared

Installer le cadre après la finition du mur

Multiple Installation Options | Opciones Múltiples de Instalación | Plusieurs options d'installation

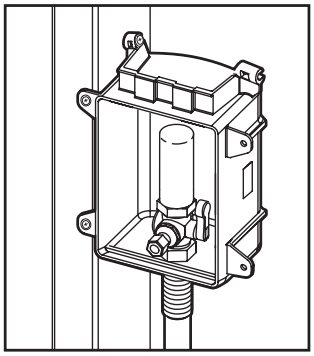

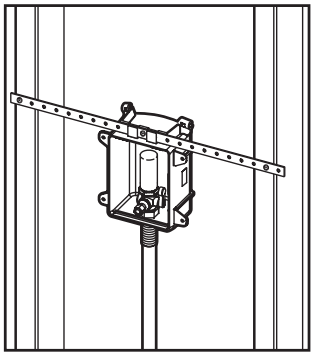

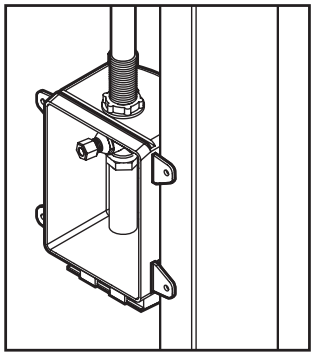

Fire-rated OxBox™

Design Specification

1. WALL CONSTRUCTION

a. Wood or metal stud construction, max 100 in.^{2} of penetrations per 100 ft^2 of wall.
b. 16" or 24" on-center stud construction.
c. Can be installed with a gap between front and back wall assemblies (UL Design # U341) (Figure 2).
d. Single-layer ⅝" gypsum construction with 1-hour fire rating.
e. Double-layer ⅝" gypsum construction with 2-hour fire rating. Frame extensions can be used.
f. Boxes cannot be installed back to back.

2. PIPE/BOX SUPPORT

a. Each outlet box shall be installed in a separate stud bay and attached to the stud (Figure 3 & 4). Fire rating does not apply to installations of two or more boxes in the same stud bay.
b. Supplied support bar.
c. Supply lines to be installed using ordinary methods.
d. Drain line to be supported using ordinary methods.

3. PIPE MATERIAL

a. 2" or larger metallic, PVC, or ABS DWV pipe.
b. Metallic or plastic water supply pipe.

4. FIRESTOP DEVICE

Sioux Chief fire-rated OxBox uses fire-rated resin. Boxes have 4" × 4" intumescent adhesive pads factory installed on the back of boxes.
NOTE: Gaps up to ½" around box can be sealed with drywall plaster. Larger gaps require firestop sealant applied to opening spanning entire drywall depth

FIGURE 1

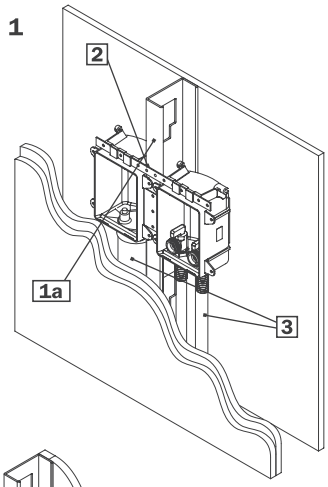

FIGURE 2

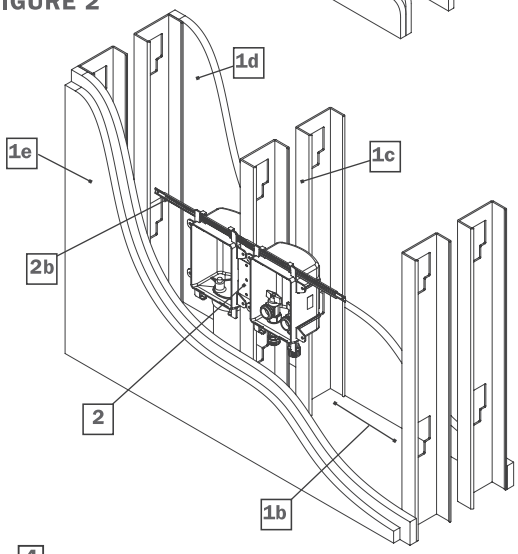

"over stud" installation

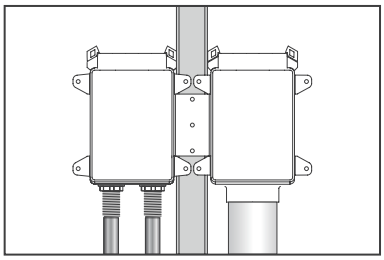

FIGURE 3

"separate stud bay" installation

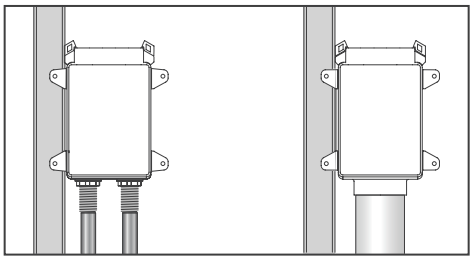

FIGURE 4

4

UL D.#U341

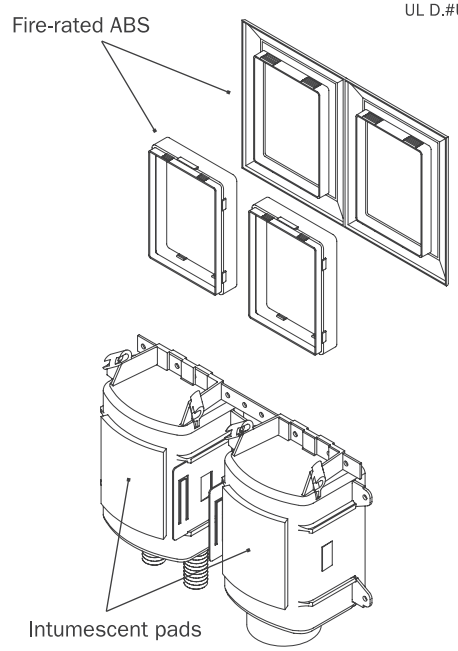

THE FIRE-RATED OXBOX IS CERTIFIED BY INTERTEK/WARNOCK HERSEY TO THE FOLLOWING FIRE RATING STANDARDS:

ASTM E-814
2 hours (F), 1½" hours (T) for 2-hour design
1 hour (F), 31 mins (T) for 1-hour design
ASTM E119

CAN/ULC S115
2 hours (F), 1½" hours (T) for 2-hour design
1 hour (F), 31 mins (T) for 1-hour design
UL 1479

INTERTEK Warnock Hersey C US
SCM SPEC ID 23320

Patent 7,360,553 and 7,735,551

www.siouxchief.com

14940 Thunderbird Road
Kansas City, MO 64147
P 1.800.821.3944
F 1.800.758.5950

Sioux Chief