Fire-Rated OxBox™

Installation Guide | Guía de Instalación | Guide d'Installation

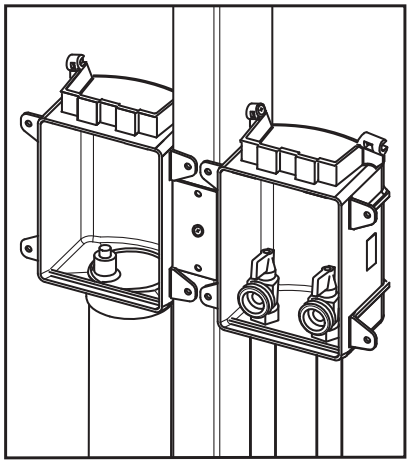

Conforms to ASTM E-814
– 2 hrs. (F) , 1.5 hrs. (T)
Conforms to ASTM E-119
Package includes factory-installed intumescent pads.

Ajuste a ASTM E-814
– 2 hrs. (F) , 1.5 hrs. (T)
Ajuste a ASTM E-119
El paquete incluye almohadilla intumescentes instaladas por la fabrica.

1

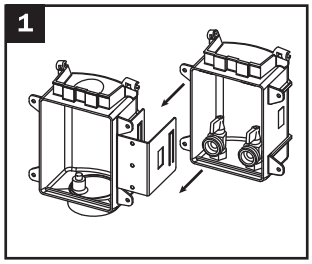

Slide boxes onto clip in desired layout

Deslice cajas hacia la abrazadera en diseño deseado

Faites glisser les boîtes sur la clip dans la disposition souhaitée

2

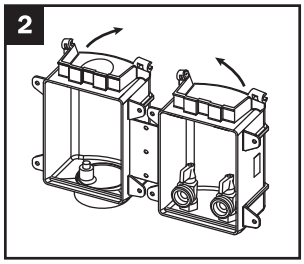

Squeeze and bend clip slightly to hold the stud. If going between studs, slide bracket into top track

Apriete y doble la abrazadera levemente para fijar el pemo. Si va por dentro de los pemos, deslice soporte hacia riel de arriba

Pressez et pincez légèrement pour tenir sur le montant. Si vous passez entre les montants, faites glisser le support dans la partie supérieure

3

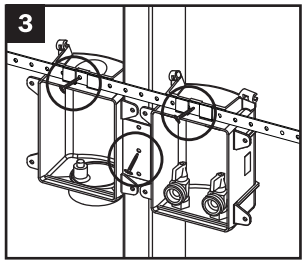

Secure assembly to stud or to support bracket

Asegure la asamblea al puntal o al riel de soporte

Fixer l'assemblage au montant ou au support

4

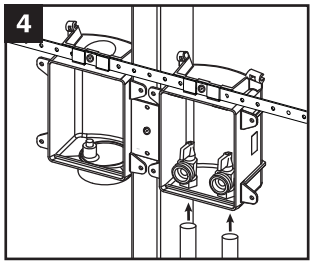

Connect supply lines according to industry standards. Open valves before any soldering

Conecte líneas de alimentación de acuerdo a los estándares de industria. Abra las válvulas antes de soldar

Raccorder les conduites d'alimentation selon les normes de l'industrie. Ouvrir les robinets avant toute soudure

5

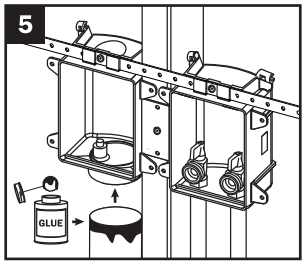

Connect drain pipe. Apply glue to pipe only

Conecte la tubería de drenaje. Aplique pegamento a la tubería únicamente

Brancher le tuyau de vidange. Appliquer de la colle sur le tuyau uniquement

6

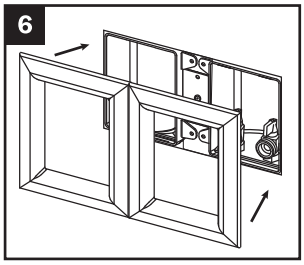

Remove test cap over drain line and install frame after wall finish

Remueva tapa de prueba sobre línea de drenaje e instale marco después de acabado de pared

Retirer le capuchon de test sur la ligne de drain et installer le cadre après la finition du mur

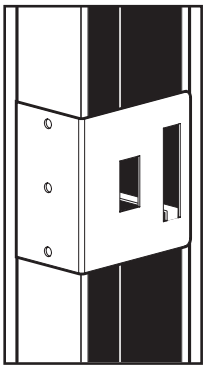

Metal Stud Support

Soporte de Metal del Montante

Support de Montant Métallique

Tabs fold down into metal stud for added rigidity

Las lengüetas doblan abajo dentro del puntal metálico para más rigidez

Les languettes se replient dans un poteau métallique pour plus de rigidité

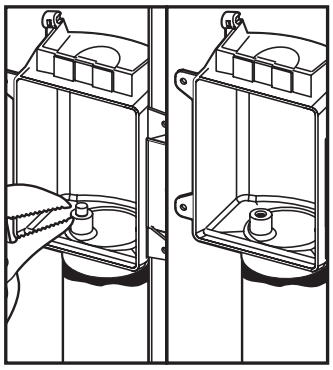

Test the System

Prueba el Sistema

Testez le système

Twist off small tip. Connect ⅝" O.D.compression fitting for air or water test

Gire y estire punta pequeña. Conecte ⅝" O.D. accesorio de compresión para prueba de aire o agua

Tordre petit bout. Raccorder le raccord de compression ⅝" O.D. pour le test d'air ou d'eau

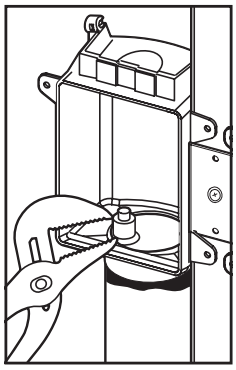

Remove Test Cap

Remueve la Tapa de Probar

Retirer le bouchon d'essai

Remove the test cap by clamping and twisting off the test nipple

Remueva la tapa de prueba con abrazando y girando y estire el manguito de unión de prueba

Retirer le capuchon d'essai en serrant et en dévissant le mamelon

Fire-rated OxBox™

Design Specification

1. WALL CONSTRUCTION

a. Wood or metal stud construction, max 100 in.^{2} of penetrations per 100 ft^2 of wall.
b. 16" or 24" on-center stud construction.
c. Can be installed with a gap between front and back wall assemblies (UL Design # U341) (Figure 2).
d. Single-layer ⅝" gypsum construction with 1-hour fire rating.
e. Double-layer ⅝" gypsum construction with 2-hour fire rating. Frame extensions can be used.
f. Boxes cannot be installed back to back.

2. PIPE/BOX SUPPORT

a. Each outlet box shall be installed in a separate stud bay and attached to the stud (Figure 3 & 4). Fire rating does not apply to installations of two or more boxes in the same stud bay.
b. Supplied support bar.
c. Supply lines to be installed using ordinary methods.
d. Drain line to be supported using ordinary methods.

3. PIPE MATERIAL

a. 2" or larger metallic, PVC, or ABS DWV pipe.
b. Metallic or plastic water supply pipe.

4. FIRESTOP DEVICE

Sioux Chief fire-rated OxBox uses fire-rated resin. Boxes have 4" × 4" intumescent adhesive pads factory installed on the back of boxes.
NOTE: Gaps up to ½" around box can be sealed with drywall plaster. Larger gaps require firestop sealant applied to opening spanning entire drywall depth

FIGURE 1

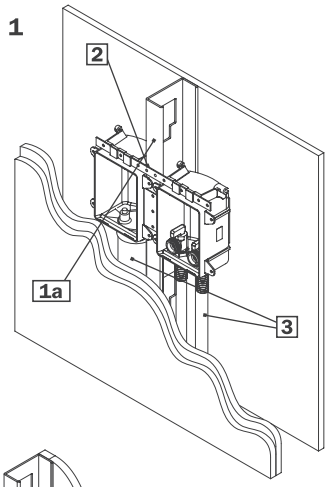

FIGURE 2

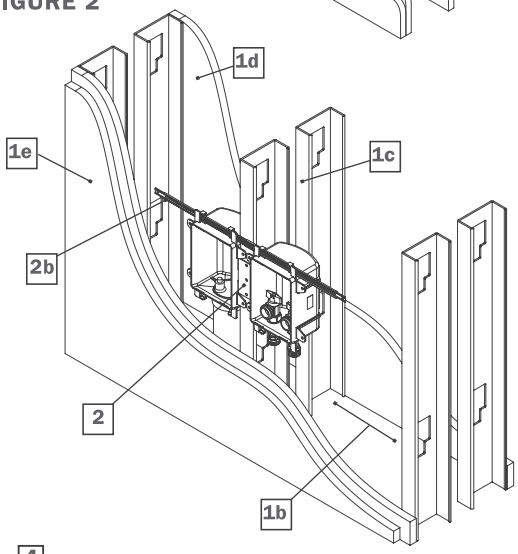

"over stud" installation

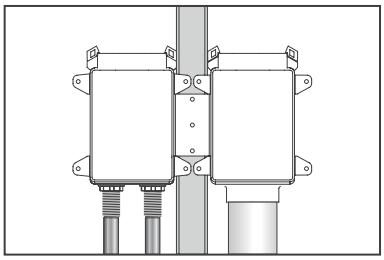

FIGURE 3

"separate stud bay" installation

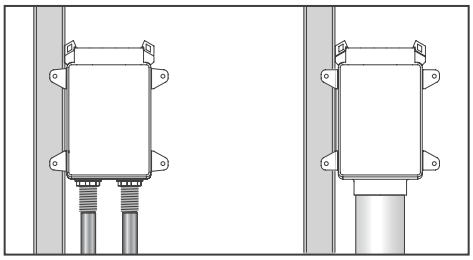

FIGURE 4

4

UL D.#U341

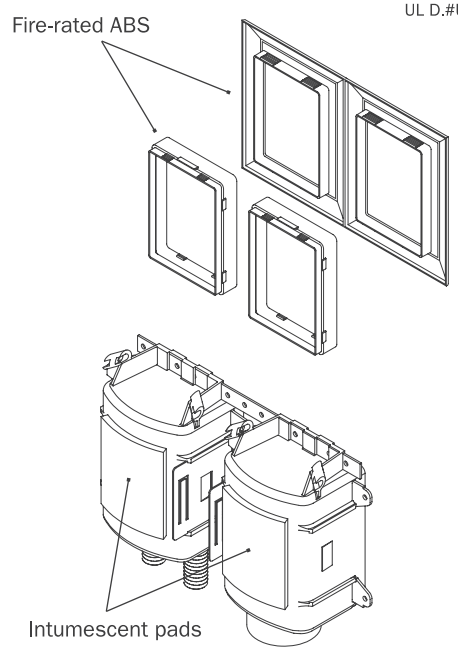

THE FIRE-RATED OXBOX IS CERTIFIED BY INTERTEK/WARNOCK HERSEY TO THE FOLLOWING FIRE RATING STANDARDS:

ASTM E-814
2 hours (F), 1½" hours (T) for 2-hour design
1 hour (F), 31 mins (T) for 1-hour design
ASTM E119

CAN/ULC S115
2 hours (F), 1½" hours (T) for 2-hour design
1 hour (F), 31 mins (T) for 1-hour design
UL 1479

INTERTEK Warnock Hersey C US
SCM SPEC ID 23320

Patent 7,360,553 and 7,735,551

www.siouxchief.com

14940 Thunderbird Road
Kansas City, MO 64147
P 1.800.821.3944
F 1.800.758.5950

Sioux Chief