CLOSET FLANGE

889 SERIES

FullFlush™

ITEM # SUBMITTED_____

JOB NAME_____

LOCATION _____

ENGINEER_____

CONTRACTOR_____

PO#_____ TAG _____

SPECIFICATION

Sioux Chief 889 series FullFlush closet flanges shall be used where necessary in drainage systems. Flange shall allow 1.5" offset in any direction, and have a full-swivel, corrosion-proof stainless steel ring, with sufficient holes for securing to floor and slots for inserting closet bolts. Flange shall have an offset inner diameter area properly sized to allow full 3" spherical-flow for complete drainage and clog resistance. Flange shall have a 3" Sch. 40 hub connection which conforms to ASTM D2665 (PVC) or D2661 (ABS). Closet flange shall be UPC listed. Always fasten closet flanges to the floor.

MATERIALS

Flange body: PVC, ABS
Flange ring: 18 gauge 430 stainless steel

DIMENSIONS

A: connection	3" Sch. 40 hub
B: ring diameter	7"
C: center-to-center offset	1½"
D: screw hole centers	6"
E: opening diameter	4"
F: overall height	4¼"
G: hub depth	1½"

889-POTM

889-AOM

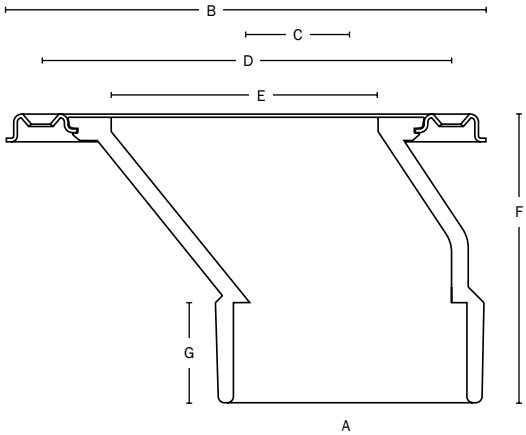

Create Item Number

889-AB

e.g. 889-POTM: 3" PVC offset closet flange with TKO knockout

CONNECTION TYPE A

- ☐ **AO** = ABS Sch. 40 hub
- ☐ **PO** = PVC Sch. 40 hub

KNOCKOUT OPTION B

- ☐ **M** = open fl ange
- ☐ **TM** = with TKO knockout