SUSPENSION CLAMP FOR CTS PIPING

557 SERIES

EZGlide™

ITEM # SUBMITTED_____

JOB NAME_____

LOCATION _____

ENGINEER_____

CONTRACTOR_____

PO#_____ TAG _____

SPECIFICATION

Sioux Chief 557 series suspension clamps are to be used where necessary to secure or suspend CTS piping in residential or commercial applications. Tube clamp has a split, ribbed design to allow for use after piping is run and to allow pipe to expand and contract. Clamps are compatible with CTS copper, PEX or CPVC tube. Clamps shall be IAPMO certified.

INSTALLATION

Spread each side of the clamp and position clamp around the tube. Use approved nail or screw in both of the provided holes to secure to stud member or structure.

MATERIALS

Standard (ivory): high impact polypropylene
Plenum-safe (orange): polyvinylidene fluoride meets ASTM E84 25/50 with UL 94 V-0 rating

WORKING TEMPERATURE

Standard (ivory): 140°F continuous; impact resistant to 0°F
Plenum-safe (orange): -10°F - 140°F

SAFE WORKING LOAD

Standard (ivory): 25 lbs.
Plenum-safe (orange): 25 lbs.

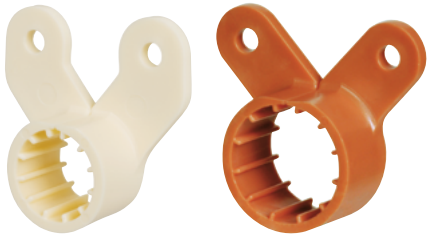

557-2 557F4

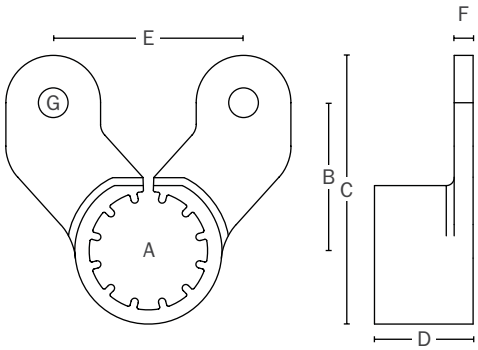

½" and ¾" models

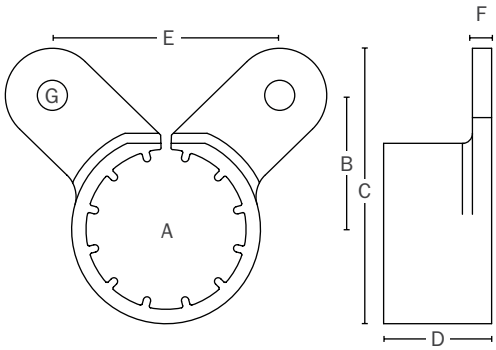

1"–2" models

DIMENSIONS

	557-2	557-3	557-4	557-5	557-6	557-7
A: Tube size CTS	½"	¾"	1"	1¼"	1½"	2"
B: Screw hole to tube center	0.938"	1.108"	1.013"	1.188"	1.363"	1.663"
C: Overall height	1.703"	1.998"	2.019"	2.332"	2.639"	3.219"
D: Overall depth	0.625"	0.675"	0.825"	0.975"	1.025"	1.125"
E: Mounting hole center-lines	1.206"	1.409"	1.421"	1.827"	1.827"	2.436"
F: Mounting tab wall thickness	0.12"	0.12"	0.12"	0.15"	0.15"	0.15"
G: Hole diameter	0.188"	0.188"	0.188"	0.188"	0.188"	0.188"

Made in USA

Create Item Number

557-AB

e.g. 557F3: Plenum-safe ¾" CTS suspension clamp

MATERIAL A

- ☐ **–** = High-impact polypropylene
- ☐ **F** = Polyvinylidene fluoride

SIZE B

- ☐ **2** = ½" CTS
- ☐ **3** = ¾" CTS
- ☐ **4** = 1" CTS
- ☐ **5** = 1¼" CTS
- ☐ **6** = 1½" CTS
- ☐ **7** = 2" CTS