ADJUSTABLE ON-GRADE CLEANOUT

834 SERIES

FinishLine™

ITEM # SUBMITTED_____

JOB NAME_____

LOCATION _____

ENGINEER_____

CONTRACTOR_____

PO#_____ TAG _____

SPECIFICATION

Sioux Chief 834 series FinishLine adjustable on-grade cleanout shall be used where necessary in drainage systems. Cleanout shall allow adjustment before and AFTER the concrete pour. Scoriated cleanout cover shall meet applicable load requirements for intended use. Cleanout shall include a slotted, polypropylene or optional brass cleanout plug, situated in base adapter. Designed in accordance with ASME A112.36.2M-2002

MATERIALS

Ring/cover: Nickel-bronze, stainless steel, ductile iron
Coring Plug: High-impact polymer
Head Adapter/Coring Sleeve/Base Adapter: Ductile iron
Cleanout plug: Polypropylene, brass (optional)

COVER LOAD RATING

Nickel-Bronze / Stainless Steel: 4,000 lbs. (Medium duty)
Reinforced Nickel-Bronze / Stainless Steel: 15,000 lbs. (Special duty)
Ductile Iron: 6,000 lbs. (Heavy duty)
Reinforced Ductile Iron: 15,000 lbs. (Special duty)

834-4DNR

DIMENSIONS

A:	Connection (No-Hub)	3", 4"
B:	Ring/cover diameter	
	Round	6-1/2"
	Square	6-5/8"
C:	Base adapter height[1]	4-1/2"
D:	Pre-pour height[1]	5-3/8" - 6-5/8"
E:	After-pour height	
	Round	0" - 1-1/4"
	Square	5/16" - 1-1/4"
F:	Cleanout plug	3-1/2" slotted

1 add 5/16" for Push-Joint connection

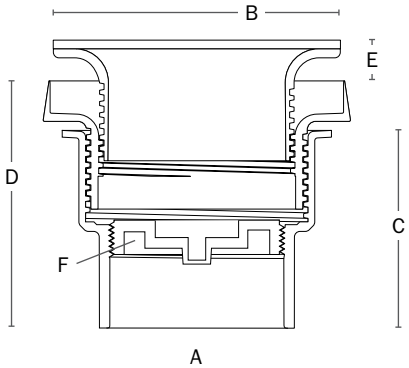

Create Item Number

834-ABC

e.g. 834-4DNRB: FinishLine adjustable cleanout with 4" No-Hub connection, round nickel-bronze cover, and brass plug

CONNECTION A

- ☐ **3D** = 3" No-Hub
- ☐ **63D** = 3" Push-Joint
- ☐ **4D** = 4" No-Hub
- ☐ **64D** = 4" Push-Joint

RING/COVER B

- ☐ **iR** = Round ductile iron
- ☐ **NR** = Round nickel-bronze
- ☐ **NQ** = Square nickel-bronze
- ☐ **SR** = Round stainless steel
- ☐ **SQ** = Square stainless steel

INSTALLED OPTIONS C

- ☐ **V** = Vandal-resistant cover screws
- ☐ **S** = Stamping (specify letters)
- ☐ **C** = Carpet marker
- ☐ **B** = Brass cleanout plug (in place of standard polypro)
- ☐ **Z** = Complies with BABAA[2]
- ☐ **P** = Push-Joint gasket for ABS/PVC pipe[3]
- ☐ **H** = Reinforced cover - Special Duty

Accessories - Available Separately:
832-P: Coring Plug / cleanout plug wrench
832-S4: Leveling shim kit
832-EX4: Ductile iron extension adapter
832-W: Flexible locating bristle kit

2 Only for cleanouts with round nickel-bronze covers | 3 In place of standard gasket for Push-Joint cleanouts