TUBE CLAMP FOR CTS PIPING

559 SERIES

ITEM # SUBMITTED_____

JOB NAME_____

LOCATION _____

ENGINEER_____

CONTRACTOR_____

PO#_____ TAG _____

SPECIFICATION

Sioux Chief 559 series tube clamps are to be used where necessary to secure CTS piping in residential or commercial applications. Tube clamp has a split, ribbed design to allow for use after piping is run and to allow pipe to expand and contract. Clamps shall be compatible with CTS copper, PEX or CPVC tube. Clamps shall be IAPMO certified.

INSTALLATION

Spread each side of the clamp and position clamp around the tube. Use approved nail or screw in both of the provided holes to secure clamp to stud member or structure.

559-2

MATERIALS

Standard (ivory): high impact polypropylene
Plenum-safe (orange): polyvinylidene fluoride meets ASTM E84 25/50 with UL 94 V-0 rating

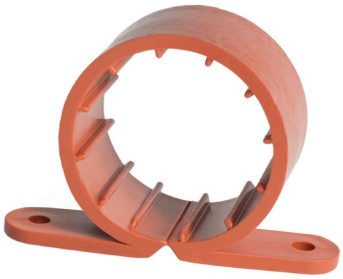

559F6

SAFE WORKING TEMPERATURES

Standard (ivory): 140°F (continuous); impact resistant to 0°F
Plenum-safe (orange): -10°F to 140°F

SAFE WORKING LOAD

Standard (ivory): 25 lbs
Plenum-safe (orange): 15 lbs

DIMENSIONS

	559_2	559_3	559_4	559_5	559_6	559_7
A: Tube size (CTS)	½"	¾"	1"	1¼"	1½"	2"
B: Overall height	1.021"	1.275"	1.535"	1.785"	2.034"	2.562"
C: Overall length	2.415"	2.617"	2.821"	3.227"	3.421"	3.836"
D: Overall depth	0.624"	0.675"	0.825"	0.975"	1.025"	1.125"
E: Mounting hole center-lines	1.624"	1.827"	2.233"	2.639"	2.843"	3.248"
F: Mounting tab wall thickness	.603"	.603"	0.12"	0.15"	0.15"	0.15"
G: Hole diameter	0.188"	0.188"	0.188"	0.188"	0.188"	0.188"

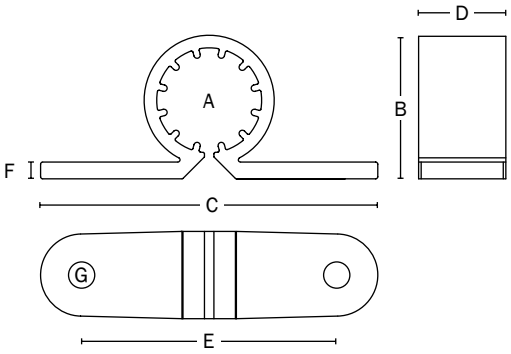

Made in USA

Create Item Number

559AB

e.g. 559F3: Plenum-safe ¾" CTS tube clamp

MATERIAL A

- ☐ **–** = High-impact polypropylene
- ☐ **F** = Polyvinylidene fluoride

SIZE B

- ☐ **2** = ½" CTS
- ☐ **3** = ¾" CTS
- ☐ **4** = 1" CTS
- ☐ **5** = 1¼" CTS
- ☐ **6** = 1½" CTS
- ☐ **7** = 2" CTS