SECONDARY DRAINAGE FUNNEL

696 SERIES

OxBox™

ITEM # SUBMITTED_____

JOB NAME_____

LOCATION _____

ENGINEER_____

CONTRACTOR_____

PO#_____ TAG _____

SPECIFICATION

Sioux Chief 696 Series OxBox Secondary Drainage Funnel shall be installed where necessary to provide 1" air gap and splash guard to dispose of drainage such as condensate. Unit shall have concave front section for use with a washing machine drain line bend support when installed in an OxBox washing machine drain box. Funnel sections have molded snaps that securely fit together for secure installation and ease of cleaning. Funnel side ridges align with slots in the bottom of the OxBox drain box (item #696-3).

MATERIALS

ABS (white)

FLOW RATE

7.0 GPM or less

WORKING TEMPERATURE

160°F

SUPPLY CONNECTION RANGE

½" CTS tubing – 1" plastic piping

DIMENSIONS

A:	Top section diameter	1.625"
B:	Total vent opening area	0.2075 in²
C:	Depth	2.375"
D:	Width	3.125"
E:	Overall height	6.5"
F:	Clip height	1"
G:	Clip width	1.81"
H:	Funnel outlet open area	0.952 in²

696-CF

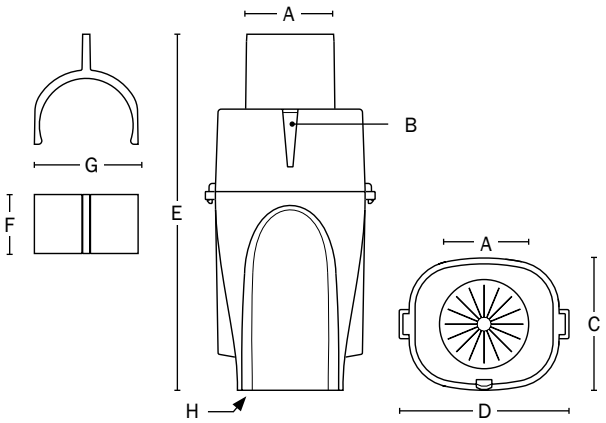

Item Number

696-CF