AIR ADMITTANCE VALVE WITH ACCESS BOX

250 SERIES

TurboVent™

ITEM # SUBMITTED_____

JOB NAME_____

LOCATION _____

ENGINEER_____

CONTRACTOR_____

PO#_____ TAG _____

SPECIFICATION

Sioux Chief 250 series TurboVent air-admittance valves with access box shall be installed as vent terminal for secondary venting within the plumbing system. Valve shall connect to DWV system via Sch. 40 adapter, and be accessible after finish wall is installed. Valve shall incorporate an actuating device which spins upon activation to keep the sealing surface clean and free of debris. During drainage, actuating device shall raise under negative line pressure to allow optimal air flow into the DWV system. Valve shall provide a positive seal at 0 psi and under any positive line pressure to prevent sewer gasses from entering the living space.

MATERIALS

Valve housing: ABS (white)
Sealing member: elastomer
DWV adapter: ABS or PVC
Access box/frame: ABS (white)
Louvered frame insert: ABS (white)

DFU RATING

Stack: 8[1] or 24[2] (drainage fixture units)
Branch: 20[1] or 160[2] (drainage fixture units)
1 when connected to 1-1/2" pipe 2 when connected to 2"pipe

CODES & STANDARDS

Certified by ASSE to 1050 & 1051; listed by IAPMO
Adapters conform to ASTM D2661/D2665
Conforms to IPC 2021 918.1; IRC 2021 P3114.1
Conforms to UPC 2021 section 301.3

250-696122P

DIMENSIONS

A: Valve width	2-3/4"
B: Valve height	2-1/8"
C: Thread size	2" NPT
D: Adapter height	1-3/4"
E: Adapter connection	1-1/2" x 2" Sch. 40 hub
F: Box rough-in width	4"
G: Box rough-in height	5-1/2"
H: Pipe cutout dia.	2-3/8"
I: Frame width	5-3/4"
J: Frame height	7-1/4"

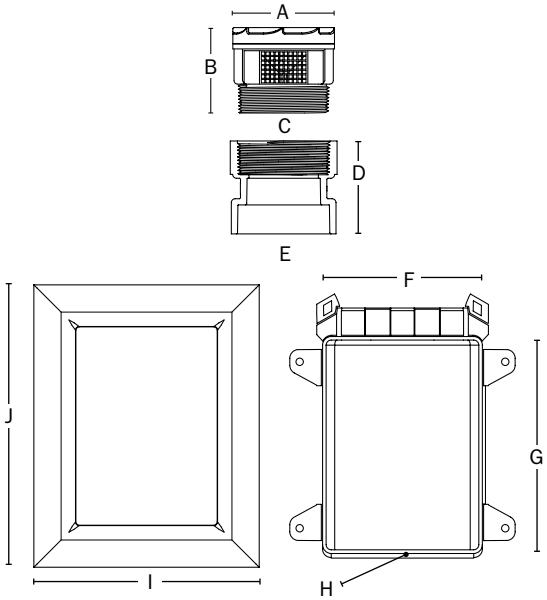

Create Item Number

250-A

e.g. 250-696122P: TurboVent air-admittance valve with access box and PVC dual-fit adapter

DWV ADAPTER A

☐ **696122A** = ABS Adapter
☐ **696122P** = PVC Adapter

IAPMO

1050 & 1051