SHOWER PAN DRAIN

821 SERIES

ITEM # SUBMITTED_____

JOB NAME_____

LOCATION _____

ENGINEER_____

CONTRACTOR_____

PO#_____ TAG _____

SPECIFICATION

Sioux Chief 821 series shower pan drain shall be used where necessary in drainage systems. Drain shall have a beveled flashing base adapter with peripheral mounting holes for securing to subfloor. Strainer shall meet all load and flow requirements for installations in shower areas. Invertible clamping collar shall fasten to drain body with four screws that thread into brass inserts. Drain body shall have a 2" Sch. 40 hub connection and connect to DWV pipe via solvent weld joint. Designed in accordance with ASME A112.18.2-2005 / CSA B125.2-05.

821-200PKQ

MATERIALS

Ring/Strainer: Nickel-bronze, 304 stainless steel
Head adapter: Gray ABS
Clamping collar: Reinforced polypropylene
Collar bolts: zinc-plated hex cap screws
Base adapter: Gray PVC, black ABS

STRAINER LOAD RATING

1,000 lbs.

STRAINER FREE AREA

Round: 4.5 in^2
Square: 7.6 in^2

STRAINER FLOW CAPACITY*

Round: 6.0 GPM
Square: 7.0 GPM

DIMENSIONS

A:	Top diameter	4½"
B:	Flange diameter	5⅞"
C:	Adjustable height	$3\frac{15}{16}$" – $5\frac{15}{16}$"
D:	Drain body height	2½"
E:	Head adapter thread	2" MIP
F:	Connection	2" Sch. 40 hub

*Observed flow rate under test conditions at 0.375" head.

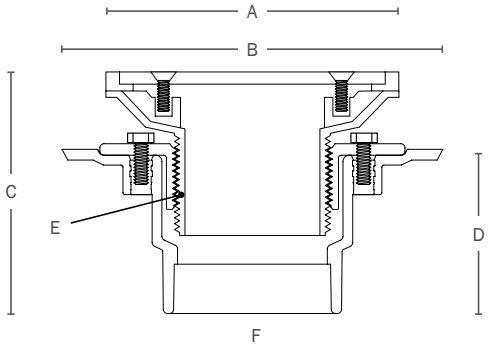

Create Item Number

821-A B C

e.g. 821-200PKQ: Shower drain with square satin nickel finish ring/strainer and 2" PVC Sch. 40 hub connection

TEST PLUG A

☐ **T** = DoubleDuty™ test plug included
☐ _ = No test plug (standard)

CONNECTION B

☐ **200A** = ABS Sch. 40 Hub
☐ **200P** = PVC Sch. 40 Hub

RING/STRAINER C

☐ **NR** = Nickel-bronze – round
☐ **CR** = Polished stainless – round
☐ **SR** = Matte stainless – round
☐ **KR** = Satin nickel-finish[1] – round
☐ **RBR** = Oil-rubbed bronze finish[1] – round
☐ **NQ** = Nickel-bronze – square
☐ **CQ** = Polished stainless – square
☐ **SQ** = Matte stainless – square
☐ **KQ** = Satin nickel-finish[1] – square
☐ **RBQ** = Oil-rubbed bronze finish[1] – square

[1] Finish applied to nickel-bronze ring/strainer