OxBox™

Outlet Box System

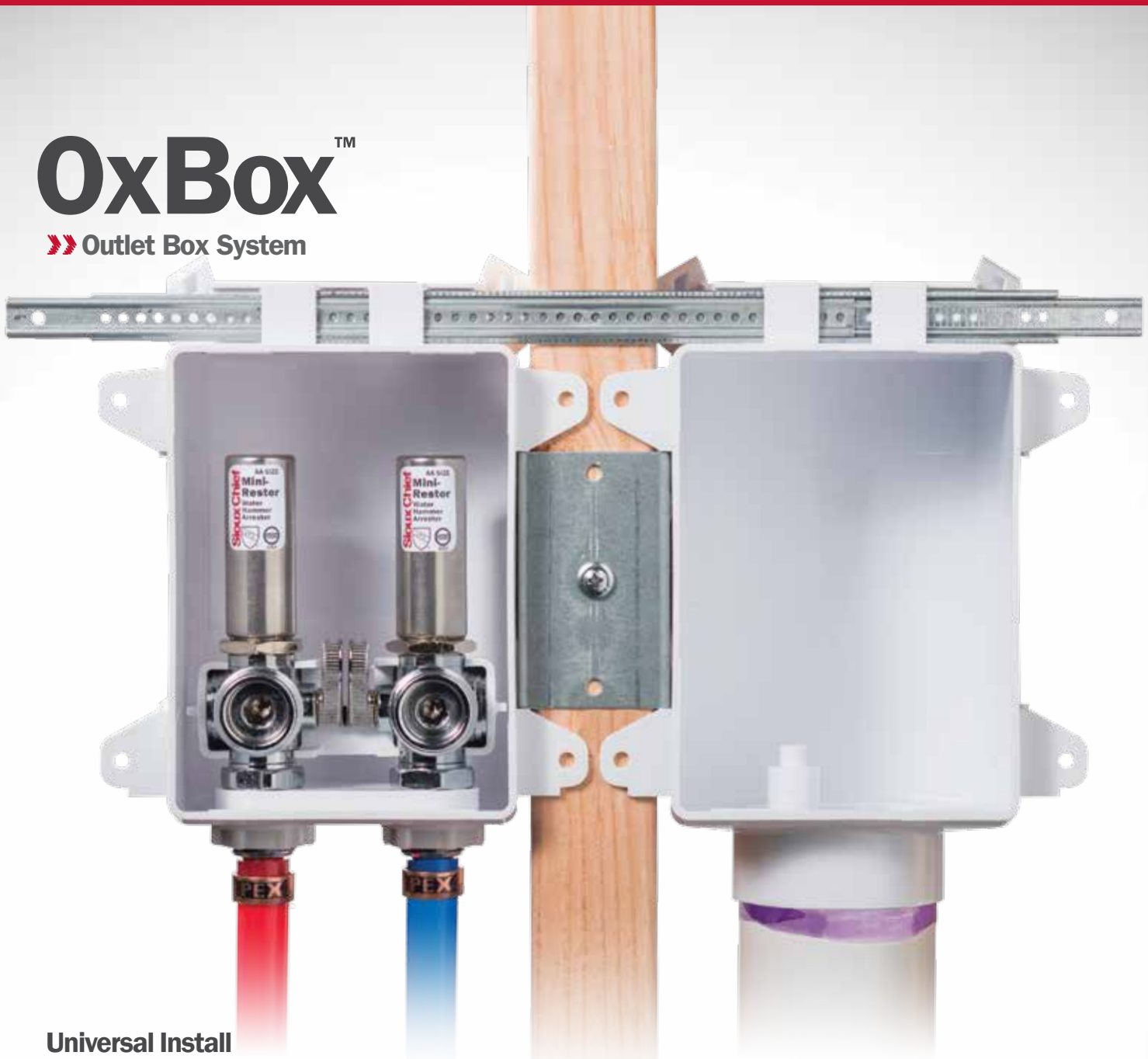

Universal Install

One box replaces right drain, left drain, bottom supply and top supply. One box size, one frame size ... all options.

Fast

Installs in half the time.

Separate Supply & Drain

DWV installed in one stud bay. No crossing over stud, saving material & line protection.

Strong

Smaller, more rigid box adds structure. High quality materials stand up to abuse.

OxBox™: Washing Machine

»Universal Outlet Box System

The OxBox utilizes a patented **two-box design** and box clip so the installer, designer or specifying engineer can have the most **ease of installation, layout flexibility and strength of install** available with any outlet box system.

Just flip & clip the boxes into the desired layout for the **quickest, most secure** and **quality** installation possible.

OxBox replaces all left and right drain commodity box options as well as all top mounted supply options.

The OxBox eliminates redundant inventory and eliminates "frame confusion" by replacing all other commodity box product.

1. Choose right or left drain line position

Right Drain

Left Drain

Flip & Clip

2. Choose top or bottom supply line position

Top Supply

Bottom Supply

Unlimited Installation Versatility

Over-the-Stud (Recommended)

Over-the-stud installation is the strongest OxBox installation option, and uses a single screw.

- Stud adds strength
- Over-the-stud placement assures box mount is perpendicular to room
- No crossing over the stud with drainage
- Reduced pipe protection plates and stud reinforcement

Between-the-Studs

Between-the-studs installation allows the supply and drain boxes to be installed in the same stud bay.

- Increases layout options and plumbing layout design

Separate Box/Separate Wall

Separate box options allow the drain to be installed on an outside wall while keeping the supply lines freeze protected on an inside wall.

- Boxes can be kept out of sight behind each appliance
- Great for wheelchair accessible locations or for assisted living facilities where easy access to supply line shut-off is desired

Stacked Box

Stacked box options allow for advanced plumbing layout flexibility exclusive to the OxBox.

- Perfect for top-mount supply
- Perfect for multi-family or apartment projects utilizing washer/dryer combos

Problems

Other outlet boxes come with many inherent problems:

More Inventory. Assembled right drain, left drain or center drain boxes require more SKUs in inventory.

Assembly Required. Unassembled components require extra assembly time, which can scar/mark up the box finish and be misplaced or lost.

Cheap Materials. Brittle and thin styrene boxes are easily damaged by job site abuse.

Inferior Bracketing. Contractors are forced to add their own wood braces to supplement flimsy styrene brackets.

Installation Difficulty. Flimsy box and brackets require extra work and leveling to install correctly.

Knockout Problems. Styrene knockouts take extra time, leave a jagged edge and can clog up the drain.

Frame Management. Extra work is required to separate frames from boxes in order to save for finish.

Frame Confusion. Different frame sizes for different boxes are difficult to manage from rough-in to finish.

Crowded Lines. Close proximity of drain and supply lines can require extra fittings or lead to damaged fittings/pipe from glue or flame.

Stud Protection Needed. Drain line in second stud bay needs added protection and reinforcement.

Brackets Are Easily Cut. Rotozip drywall cutters often cut right through thin styrene brackets leaving the plumbing as the only support.

Unprotected Opening. Open boxes are susceptible to drywall mud, paint, dirt and debris or require added time and material to protect them.

One Solution: OxBox (Over-the-Stud Recommended Install)

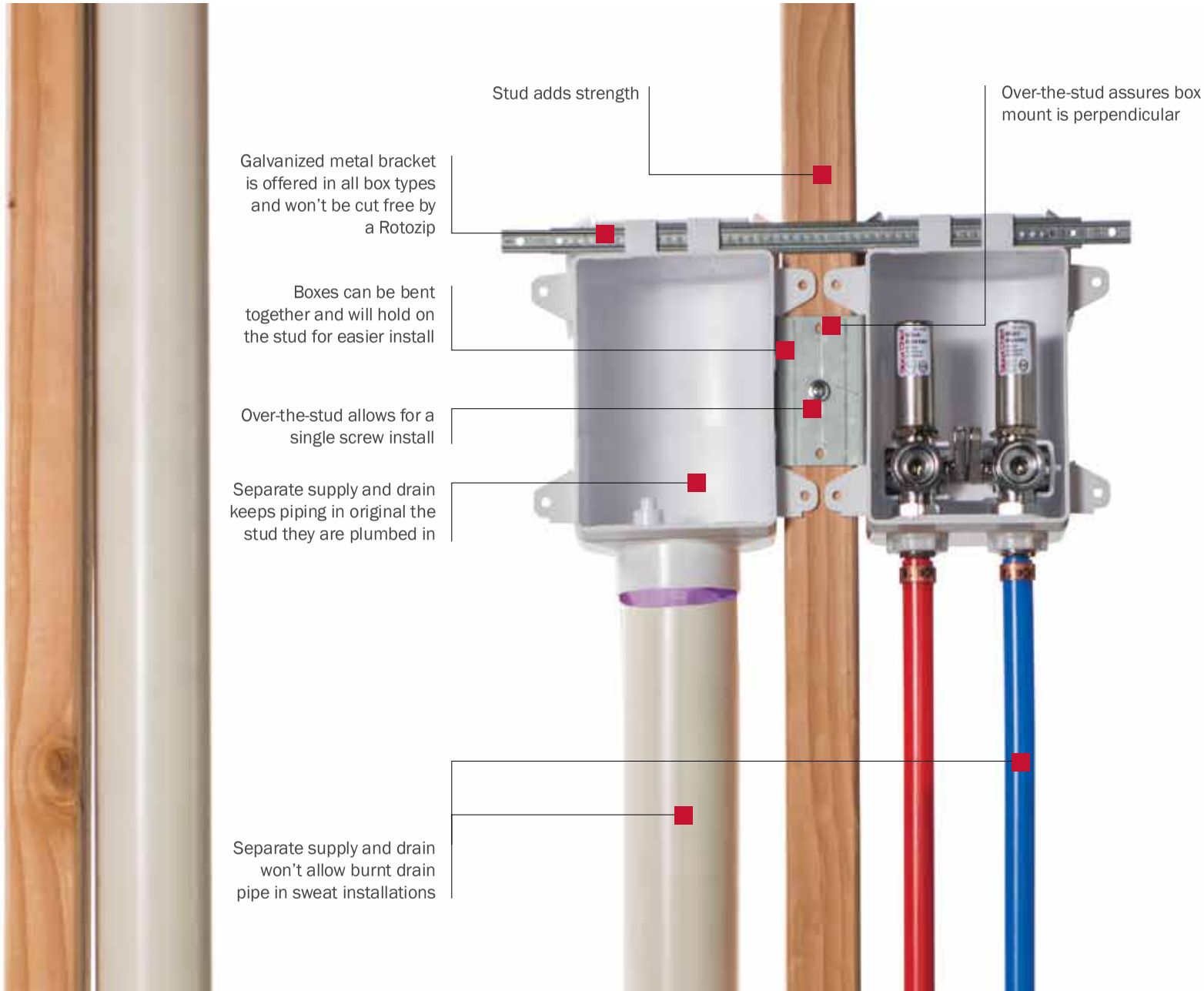

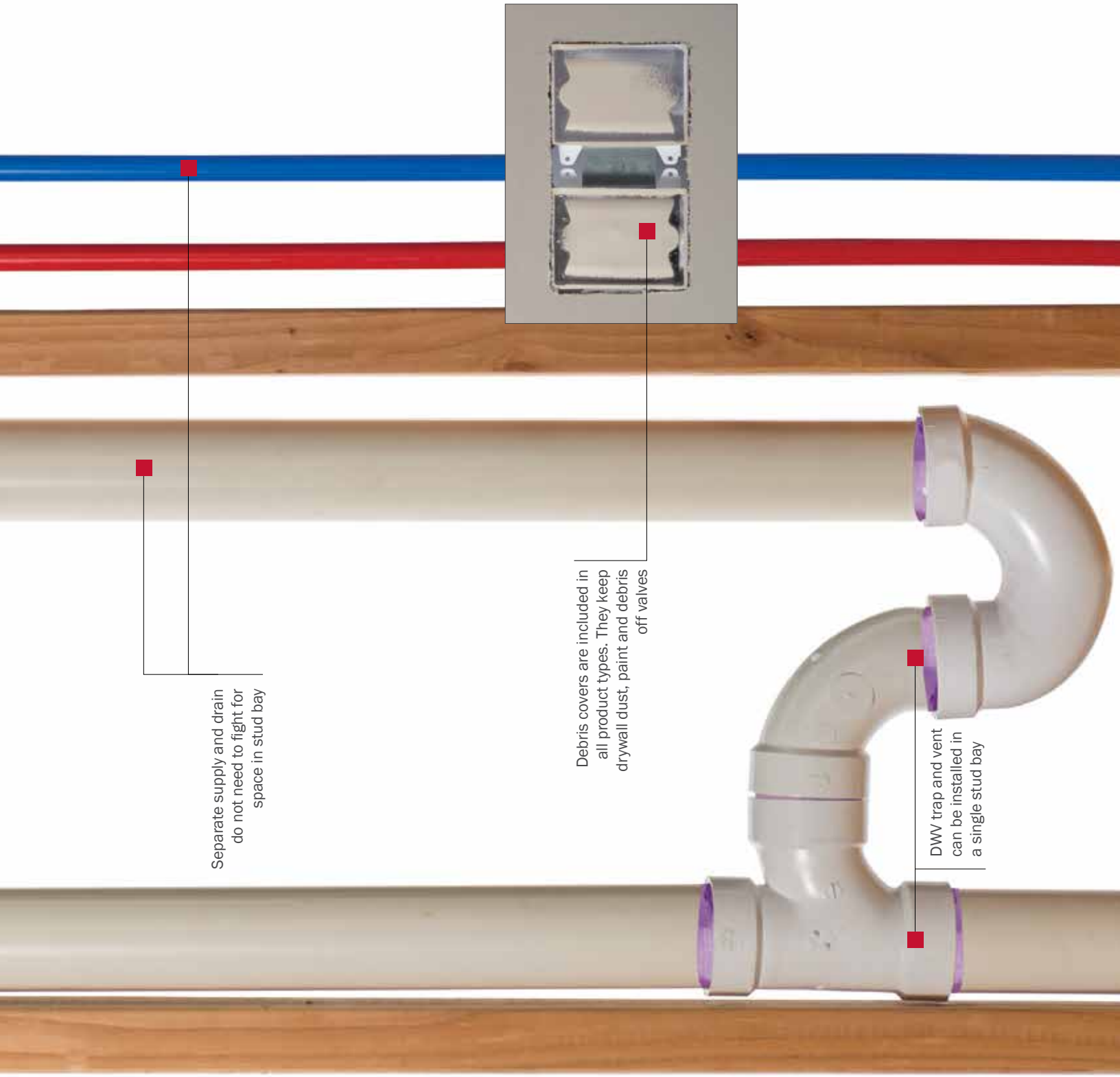
Separate supply and drain do not need to fight for space in stud bay
Debris covers are included in all product types. They keep drywall dust, paint and debris off valves
DWV trap and vent can be installed in a single stud bay

Installation Comparison

The OxBox **installs in half the time** of a typical commodity box installation, saving you time, money, and labor.

The OxBox provides the **strongest installation** on the market. Thicker ABS material and smaller box size provide an installation as strong as an ox. When installed using the recommended over-the-stud installation, the application is strengthened and protected by the stud support and provided bracket.

A single OxBox sku has **16 times the installation versatility** over standard commodity boxes including: over-the-stud, between-studs, and separate bays, so you can be sure the OxBox will work in any application.

Frame

No matter the box type, one frame fits every box. Frames are appliance white and contoured for an aesthetically pleasing finish.

Commodity Outlet Box Installation

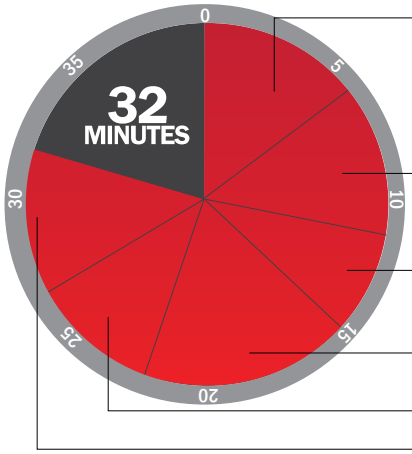

- Measure and drill supply and waste pipe locations: **6 minutes**
- Set box and secure to rough height: **6 minutes**
- Measure, cut and set waste pipe to box rough height: **3 minutes**
- Measure, cut and connect supply lines to box: **8 minutes**
- Set pipe protections to code standard: **4 minutes**
- Measure, cut and set additional brackets: **5 minutes**

VS.

OxBox Installation

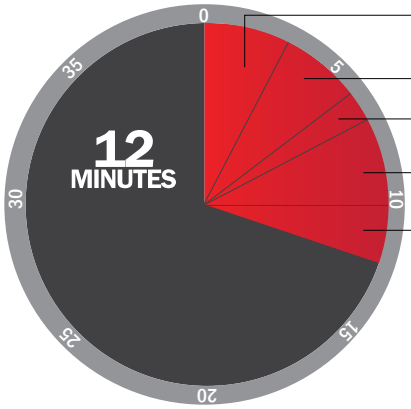

- Measure and drill supply and waste pipe locations: **3 minutes**
- Set box and secure to rough height: **3 minutes**
- Measure, cut and set waste pipe to box rough height: **1 minute**
- Measure, cut and connect supply lines to box: **3 minutes**
- Set pipe protections to code standard: **2 minutes**

62.5%

Installation time savings

Features & Benefits

Frame can be split into individual frames by breaking along the back septum for separate or stacked box installs.

ABS material allows the knockout to be removed in one piece and will not fall down the drain.

Secondary drain funnel fits perfectly into the drain box for a clean and professional finish.

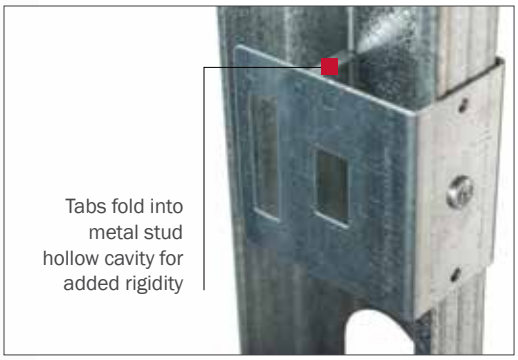

Sliding support bracket comes standard in all packages

Made in the USA

High quality MiniRester™ water hammer arrester options

Single handle look with dual handle functionality

Valve clips and platform keep valves aligned correctly. The platform allows hose connections to be made easier than commodity boxes

Bottom ridge will accept an additional support bracket for even greater installation strength

All common industry inlet connections are available

"The job site can be brutal on access boxes, and the OxBox has stood up to the abuse time and time again. We appreciate the strength and versatility the box offers. No matter how the drain and water lines are installed, the OxBox works every time. From the quality of materials to the look of the product, the OxBox works for us and our customers."

Tim Evans
AMI Mechanical, Inc.
Thornton, CO

Product Types

Washing Machine Box

Separate drain and supply boxes offer the most versatility in installation.

- Patents: #7,360,553 & #7,735,511 & #785,433,7B1
- Versatile: One box sku replaces all other commodity outlet box skus
- Fast: Installs in less than 1/2 the time of commodity boxes
- Strong: OxBox offers the industry's strongest installation

696-2313WR

OxBox ONE™ – Washing Machine Box

Smallest profile of any laundry supply and drain box combo.

- One Box, same OxBox frame
- Small size adds strength of install
- Economical applications
- Can mount directly to the stud for a fast and perfectly aligned installation

696-2403CR

Ice Maker Box

Same size box as all supply boxes. Made with highest quality valves and material. Tested to assure best quality.

- Boxes can be positioned with arrester in any position
- Quickly installs on or between studs

696-1010MR

Lavatory Box

Replaces stub outs, escutcheons, supply stops and bracketing. The box eliminates the installation and liability of the same while standardizing installation.

- Installs in 1/5 the time of typical installation materials
- One box replaces stub outs, bracketing, valves and escutcheons
- Box installs at rough-in stage and remains on test throughout all construction phases
- Highest quality valves and material available

696-2001MR

Toilet/Dishwasher Box

Perfect water service box for 3/8" outlet appliance needs. Available with arresters for protection of solenoid operation.

- Fast and secure installations
- One box replaces stub out, bracketing, valve and escutcheon
- Box installs at rough-in stage and does not require the typical system drain down for valve installation

696-1011MR

Gas Box

Gas appliance can be set closer to the wall by utilizing a recessed gas box.

- Available in CSST or iron pipe varieties
- Complies with ANSI Z21.15-1997 / CGA 9.1-M97
- Quickly and securely installs on the stud or between studs with supplied support bracket

696-1020GR

TurboVent™ with OxBox

Provides a quick and easy installation for a bathroom fixture group or individual fixture in a single, out-of-the way and aesthetically pleasing installation.

- Available in various DFU offerings
- ASSE 1050 & 1051 listed and cIAPMO certified Air Admittance Valve

250-696122P

3/4" Hose Service Box

Perfect for wash down stations, commercial ice maker supply or for modern appliance water supply.

- Quick and easy installation on or between studs

696-1013MR

Options & Product Variations

Arrester Product or Standard

All OxBox Access product can be ordered with or without arresters. MiniRester water hammer arresters are made in the USA, cUPC listed and ASSE certified.

Inlet Connections

All OxBox product variations are available with the industry's leading connection systems.

½" PEX
F1807 Crimp

½" PEX
F1960 Grip

½" Female
Sweat

½" CPVC

½" PEX
F2080 Lock

½" Viega®
PEX Press

Outlet Connections

All OxBox product variations come with industry standard connection outlet option.

Ice Maker
1/4" Comp.

Washing Machine
3/4" hose, two
per box

Lavatory
3/8" Comp.
two per box

Single
3/4" hose

Toilet
3/8" Comp.

Gas
1/2" or
3/4" FIP

Rough-In Pack or Standard

All OxBox Products are available to ship as rough-in packaged product or standard packaged product.

Rough-In

- Boxes are shipped separate from frames
- Frames can be ordered when the job is complete and remain off the job, secure and clean

Standard

- Boxes are shipped with the frames in a sealed bag
- Bags are complete with the installation instructions directly printed on the bag

696-2313MF

696-2313MR

Retail Box Options

OxBox Washing Machine and Ice Maker boxes are available in retail packaging. Each OxBox is packaged in an individually bar-coded display box.

No Lead or Standard

OxBox valves are made of No Lead or standard brass materials. No Lead material is additionally dezincification resistant and stress corrosion cracking resistant.

- Washing Machine: available in both standard and no lead alloys, both are chrome-plated
- Ice/Lav/Toilet & Dishwasher: available in no lead material and chrome-plated

NO LEAD

Fire-Rated or Standard

Fire-Rated OxBox products are certified by Intertek/Warnock Hersey to the following Fire-Rating Standards:

ASTM E-814

2 hours (F), 1½ hours (T)

for 2-hour design

1 hour (F), 31 min (T)

for 1-hour design

UL 1479

ASTM E-119

2 hours (F), 1½ hours (T)

for 2-hour design

1 hour (F), 31 min (T)

for 1-hour design

CAN/ULC S115

696R2313MF

Accessories

Frame Inserts

- Louvered frame insert provides an aesthetically pleasing cover for Air Admittance Valve box applications
- Notched frame insert conceals the valves and inhibits tampering of valves while leaving hose/valve access

696-1F W/ 696-LC | 696-SC | 696-SC1

Frame Extensions

- Adds 1/2" of additional drywall depth
- Made of Fire-Rated material and perfect for furred out or double drywall depth walls
- Extensions can be stacked to achieve deeper depths

696-EX

Caps

- Protect valves from undesired operation
- Brass caps with gasket for testing and valve operation protection

696-C0 | 696-C1 | 696-C3

Valves

- Valves and components can be combined to make any desired supply box configuration
- High quality 1/4-turn ball valve is a perfect solution for No Lead re-pipe applications

Boxes

- One-hole boxes for ice maker, toilet, gas and AAV access; two-hole boxes for washing machine and lavatory access
- Drain box with integral test nipple on knockout
- Made from durable ABS material

696-1 696-2 696-3

Box Clips

- Box Clip connects two OxBox outlet boxes
- Enables the strongest outlet box installations by straddling wood or metal studs
- Tabs fold into metal stud hollow cavity for added rigidity

696-BC

Debris Covers

- Protects OxBox from paint or drywall mud while on the job site

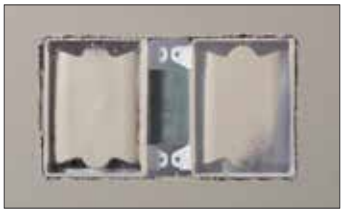

696-DC

Sliding Brackets

Allows box configuration to be installed between studs

- Provides protection from drywall installers cutting through support ears
- Adjustable length from 9" to 18"

520-09

Secondary Drainage Funnel

The funnel is ideal for adding condensate, water softener or other auxiliary lines to the drain box, and can be used in conjunction with a washing machine drain hose. Provides 1" air gap.

- Two-piece design snaps together for fast installation and easy cleaning
- Drains 7 GPM
- Fingers in top housing hold 1/2" CTS – 1" IPS piping firmly in place

696-CF

Application Variations & Layout Options

Dual Drain

Attach a second drainage box and TurboVent for a dual drain installation.

- OxBox AAV boxes can eliminate the need for long runs of vent piping
- Boxes can be clipped to one another for a secure installation

Kitchen Sink

Combining two application box types into one location offers consistent looks and unmatched strength of install.

- Arrester configurations should be chosen to protect solenoid operated appliances
- A dishwasher box next to a lavatory box will provide all the 3/8" outlets necessary

DWV Testing

Air or water tests are made easy at the laundry location.

- Patented GripTip feature on the OxBox drain box allows easy testing between supply and drain boxes

General Appliance/Water Service Box

Modern appliances require a single 3/4" hose valve for water service.

Installation

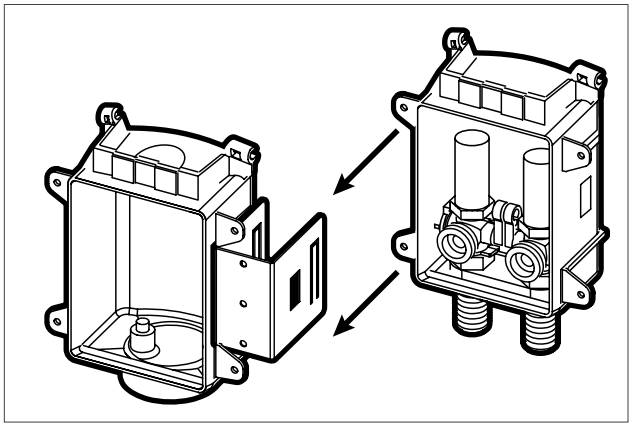

Clip boxes together in desired configuration. Clip slides into tracks.

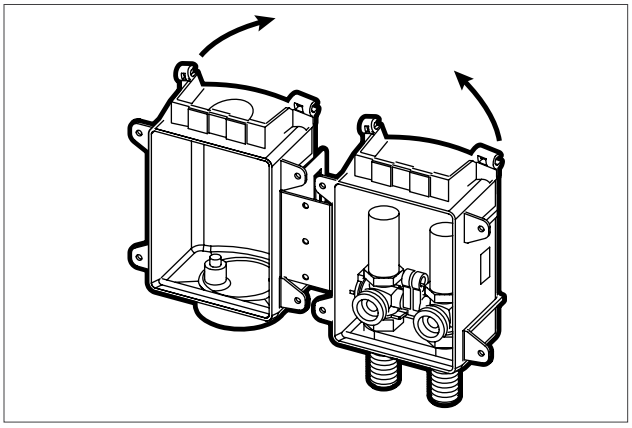

Gently bend boxes together to hold onto the stud. Slide support bracket through top track for alternate installation.

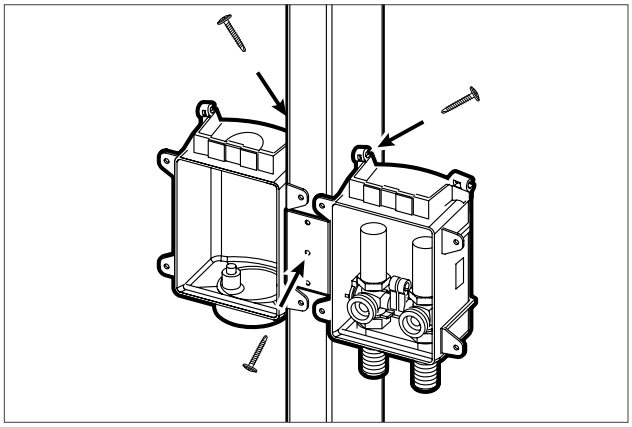

Secure the assembly with nails/screws to studs or to support bracket.

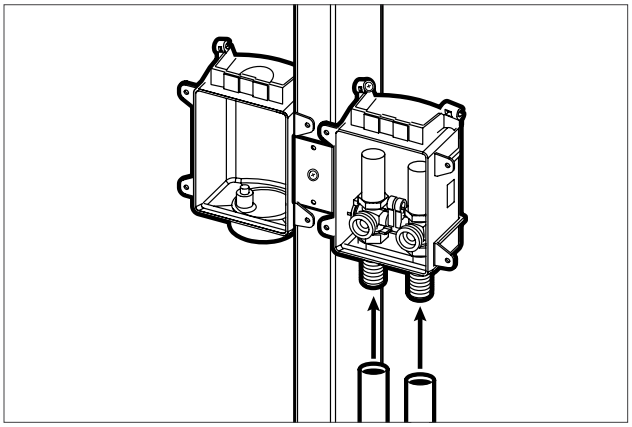

Plumb the supply lines in the typical manner. Open valves before soldering. DO NOT allow flame to come into contact with the box.

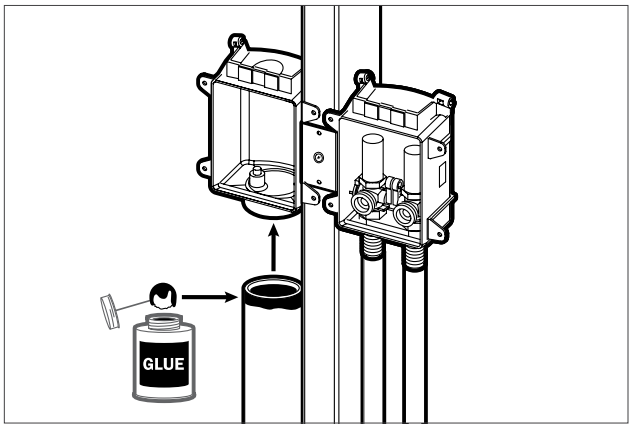

Plumb the drain line in the typical manner. Wait for glue to cure before testing. DO NOT glue box. Apply glue to pipe only.

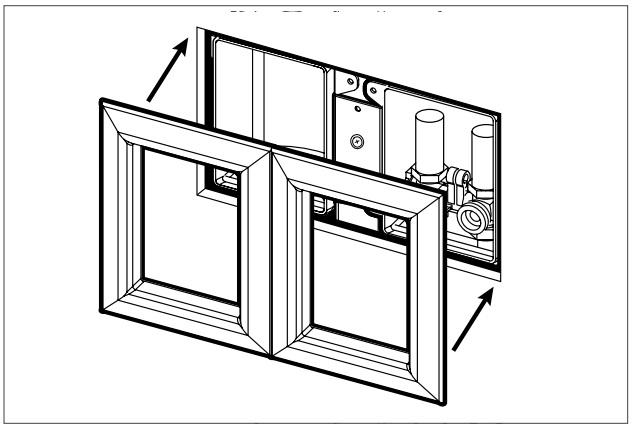

Install the frame after the wall has been finished.

TAKE THE FIELD.

24110 South Peculiar Drive
Peculiar, Missouri 64078
P 1.800.821.3944
F 1.800.758.5950

DISTRIBUTED BY

Scan the code or visit
chief.si/OxBoxVideo
to learn more about the
OxBox labor savings advantage.