Product data sheet

# L40E-11MA1A

## L4000 Systems

SAFETY SINGLE-BEAM SENSORS

SICK
Sensor Intelligence.

## Ordering information

| Scanning range | Model | Housing material | System part | Type | Part no. |
|---|---|---|---|---|---|
| 7 m | M18 radial | Nickel-plated brass | Receiver | L40E-11MA1A | 6027342 |

Other models and accessories ➜ www.sick.com/L4000_Systems

## Detailed technical data

### Features

| | |
|---|---|
| **Scanning range** | 7 m |
| **Number of beams** | 1 |
| **Detection capability** | 30 mm |
| **Optical axis** | Radial |
| **Response time** | 0.4 ms |
| **Response time** | 0.4 ms + Test device response time (UE401) |

### Safety-related parameters

| | |
|---|---|
| **Type** | Type 4 (IEC 61496-1) [1] |
| **Safety integrity level** | SIL 3 (IEC 61508) [1] |
| **Category** | Category 4 (EN ISO 13849) [1] |
| **Performance level** | PL e (EN ISO 13849) [1] |
| **$PFH_D$ (mean probability of a dangerous failure per hour)** | $2.9 \times 10^{-10}$ (EN ISO 13849) [1] |
| **$T_M$ (mission time)** | 20 years (EN ISO 13849) [1] |

[1] Only in conjunction with UE401.

### Interfaces

| | |
|---|---|
| **Connection type** | Male connector M12, 4-pin, straight |
| **Display elements** | LED |

### Electrical data

| | |
|---|---|
| **Protection class** | III (IEC 61140) |
| **Supply voltage $V_S$** | 24 V DC (19.2 V DC ... 28.8 V DC) |
| **Power consumption** | ≤ 30 mA |

### Mechanical data

| | |
|---|---|
| **Design** | Cylindrical |
| **Dimensions (diameter x length)** | M18 x 107.7 mm |

| | |
|---|---|
| **Housing material** | Nickel-plated brass |
| **Lens material** | Glass |
| **Weight** | 67 g |

## Ambient data

| | |
|---|---|
| **Enclosure rating** | IP67 (EN 60529) |
| **Ambient operating temperature** | –20 °C ... +55 °C |
| **Storage temperature** | –25 °C ... +75 °C |
| **Air humidity** | 15 % ... 95 %, Non-condensing |
| **Vibration resistance** | 5 g, 10 Hz ... 55 Hz (IEC 60068-2-6) |
| **Shock resistance** | 10 g, 16 ms (IEC 60068-2-29) |

## Other information

| | |
|---|---|
| **Aperture angle/receiving angle** | ± 2.5° / ± 2.5° |

## Classifications

| | |
|---|---|
| **ECLASS 5.0** | 27272701 |
| **ECLASS 5.1.4** | 27272701 |
| **ECLASS 6.0** | 27272701 |
| **ECLASS 6.2** | 27272701 |
| **ECLASS 7.0** | 27272701 |
| **ECLASS 8.0** | 27272701 |
| **ECLASS 8.1** | 27272701 |
| **ECLASS 9.0** | 27272701 |
| **ECLASS 10.0** | 27272701 |
| **ECLASS 11.0** | 27272701 |
| **ECLASS 12.0** | 27272701 |
| **ETIM 5.0** | EC001831 |
| **ETIM 6.0** | EC001831 |
| **ETIM 7.0** | EC001831 |
| **ETIM 8.0** | EC001831 |
| **UNSPSC 16.0901** | 46171620 |

## Dimensional drawing (Dimensions in mm (inch))

M18, radial, straight

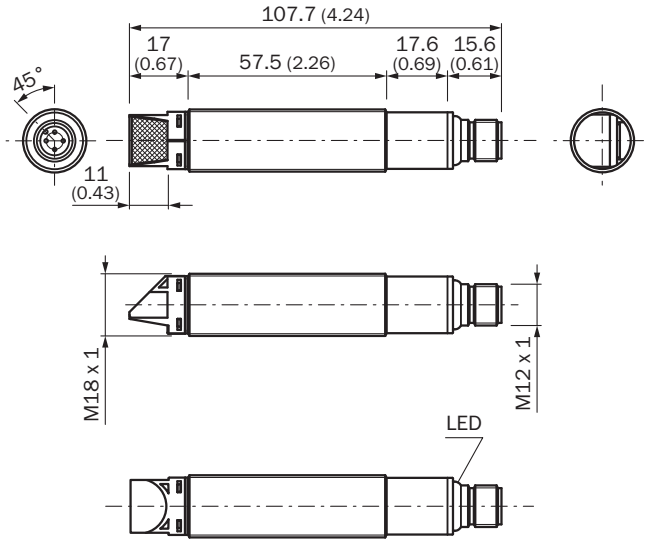


## Recommended accessories

Other models and accessories ➜ www.sick.com/L4000_Systems

| | Brief description | Type | Part no. |
|---|---|---|---|
| Deflector mirrors | | | |
| | Horizontal deflection, 75 mm x 80 mm reflector surface, Glass, Incl. mounting kit (2 x swivel mount) | PNS75-008 | 1026647 |
| | Horizontal deflection, 96 mm x 124 mm reflector surface, Glass | PSK1 | 1005229 |
| | Deflector mirror for 90° deflection, mirror surface 97 mm x 80 mm, not suitable for column mounting, Glass, mounting hardware included | PSK45 | 5306053 |
| Mounting brackets and plates | | | |
| | Mounting bracket for M18 sensors, steel, zinc coated, without mounting hardware | BEF-WN-M18 | 5308446 |
| Plug connectors and cables | | | |
| | • **Connection type head A:** Female connector, M12, 4-pin, straight, A-coded<br>• **Connection type head B:** Flying leads<br>• **Signal type:** Sensor/actuator cable<br>• **Cable:** 5 m, 4-wire, PVC<br>• **Description:** Sensor/actuator cable, unshielded<br>• **Application:** Zones with chemicals | YF2A14-050VB3XLEAX | 2096235 |

| | Brief description | Type | Part no. |
|---|---|---|---|
| | • **Connection type head A:** Female connector, M12, 4-pin, angled, A-coded<br>• **Connection type head B:** Flying leads<br>• **Signal type:** Sensor/actuator cable<br>• **Cable:** 5 m, 4-wire, PVC<br>• **Description:** Sensor/actuator cable, unshielded<br>• **Application:** Zones with chemicals | YG2A14-050VB3XLEAX | 2095897 |
| | • **Connection type head A:** Female connector, M12, 4-pin, straight<br>• **Description:** Unshielded, Head A: female connector, M12, 4-pin, straight, unshielded, for power supply, for cable diameter 4 mm ... 6 mm Head B: -<br>• **Connection systems:** Screw-type terminals<br>• **Permitted cross-section:** ≤ 0.75 mm² | DOS-1204-G | 6007302 |
| | • **Connection type head A:** Female connector, M12, 4-pin, angled<br>• **Description:** Unshielded, Head A: female connector, M12, 4-pin, angled, unshielded, for power supply, for cable diameter 3 mm ... 6.5 mm Head B: -<br>• **Connection systems:** Screw-type terminals<br>• **Permitted cross-section:** ≤ 0.75 mm² | DOS-1204-W | 6007303 |
| Switching amplifiers | | | |
| | • **Applications:** Evaluation unit<br>• **Compatible sensor types:** L4000 Systems single-beam photoelectric safety switches | UE401-A0010 | 6027343 |

# SICK AT A GLANCE

SICK is one of the leading manufacturers of intelligent sensors and sensor solutions for industrial applications. A unique range of products and services creates the perfect basis for controlling processes securely and efficiently, protecting individuals from accidents and preventing damage to the environment.

We have extensive experience in a wide range of industries and understand their processes and requirements. With intelligent sensors, we can deliver exactly what our customers need. In application centers in Europe, Asia and North America, system solutions are tested and optimized in accordance with customer specifications. All this makes us a reliable supplier and development partner.

Comprehensive services complete our offering: SICK LifeTime Services provide support throughout the machine life cycle and ensure safety and productivity.

**For us, that is "Sensor Intelligence."**

# WORLDWIDE PRESENCE:

Contacts and other locations –www.sick.com



SICK
Sensor Intelligence.