Product data sheet

C4MT-01214ABB03BE0

miniTwin

SAFETY LIGHT CURTAINS

SICK
Sensor Intelligence.

Illustration may differ

Ordering information

miniTwin4 as a standalone device, miniTwin4 as last guest for 2- or 3-device cascade

System connection	Resolution	Length of cable	Protective field height	Type	Part no.
Male connector M12, 5-pin	14 mm	160 mm	120 mm	C4MT-01214AB-B03BE0	1207094

This article includes 1 twin stick. Please order 2 for a functioning miniTwin4 system.

Other models and accessories → www.sick.com/miniTwin

Detailed technical data

Features

System part	1 Twin-Stick
Usage	miniTwin4 as a standalone device miniTwin4 as last guest for 2- or 3-device cascade
Mounting system type	C-fix or L-fix bracket
Resolution	14 mm
Scanning range	
Minimum	0 m ... 4 m
Typical	0 m ... 5 m
Protective field height	120 mm
Response time	≤ 14 ms [1)]
Synchronization	Optical, without separate synchronization
Items supplied	Twin stick System plug C-Fix bracket and L-Fix bracket, 2 pieces each Test rod with diameter corresponding to the resolution of the safety light curtain Safety instruction Mounting instructions Operating instructions for download

[1)] Standalone devices, no cascaded systems. Other response times can be found in the operating instructions.

Safety-related parameters

Type	Type 4 (IEC 61496-1)
Safety integrity level	SIL 3 (IEC 61508)
Category	Category 4 (EN ISO 13849)
Performance level	PL e (EN ISO 13849)
PFH_D (mean probability of a dangerous failure per hour)	Standalone system: 4.3×10^{-9} (EN ISO 13849)
T_M (mission time)	20 years (EN ISO 13849)
Safe state in the event of a fault	At least one OSSD is in the OFF state.

Functions

	Functions	Delivery status
Restart interlock	✓	Deactivated
External device monitoring (EDM)	✓	Deactivated
Beam coding	Automatic	

Interfaces

System connection	Male connector M12, 5-pin
Length of cable	160 mm
Conductor cross section	0.34 mm²
Permitted cable length	≤ 20 m [1]
Configuration method	Hard wired
Display elements	LEDs

[1] Depending on load, power supply and wire cross-section. The technical specifications must be observed.

Electrical data

Protection class	III (EN 61140)
Supply voltage V_S	24 V DC (19.2 V DC ... 28.8 V DC)
Ripple	≤ 10 % [1]
Power consumption	≤ 3 A [2]
Output signal switching devices (OSSDs)	
Type of output	PNP semiconductors, short-circuit protected, cross-circuit monitored [3]
ON state, switching voltage HIGH	24 V DC (V_S – 2.25 V DC ... V_S)
OFF state, switching voltage LOW	≤ 2 V DC
Current-carrying capacity per OSSD	≤ 300 mA

[1] Within the limits of V_S.
[2] Maximum power consumption of a host/guest/guest system with 1,200 mm protective field height and a resolution of 14 mm.
[3] Applies to the voltage range between –30 V and +30 V.

Mechanical data

Housing cross-section (incl. system connection)	15 mm x 32 mm
Housing material	Aluminum alloy ALMGSI 0.5
Weight	50 g

Ambient data

Enclosure rating	IP65 (EN 60529)
Ambient operating temperature	–20 °C ... +55 °C
Storage temperature	–25 °C ... +70 °C
Air humidity	15 % ... 95 %, Non-condensing
Vibration resistance	5 g, 10 Hz ... 55 Hz (EN 60068-2-6)
Shock resistance	10 g, 16 ms (EN 60068-2-27)

Other information

Wave length	850 nm

Classifications

ECLASS 5.0	27272704
ECLASS 5.1.4	27272704
ECLASS 6.0	27272704
ECLASS 6.2	27272704
ECLASS 7.0	27272704
ECLASS 8.0	27272704
ECLASS 8.1	27272704
ECLASS 9.0	27272704
ECLASS 10.0	27272704
ECLASS 11.0	27272704
ECLASS 12.0	27272704
ETIM 5.0	EC002549
ETIM 6.0	EC002549
ETIM 7.0	EC002549
ETIM 8.0	EC002549
UNSPSC 16.0901	46171620

Dimensional drawing (Dimensions in mm (inch))

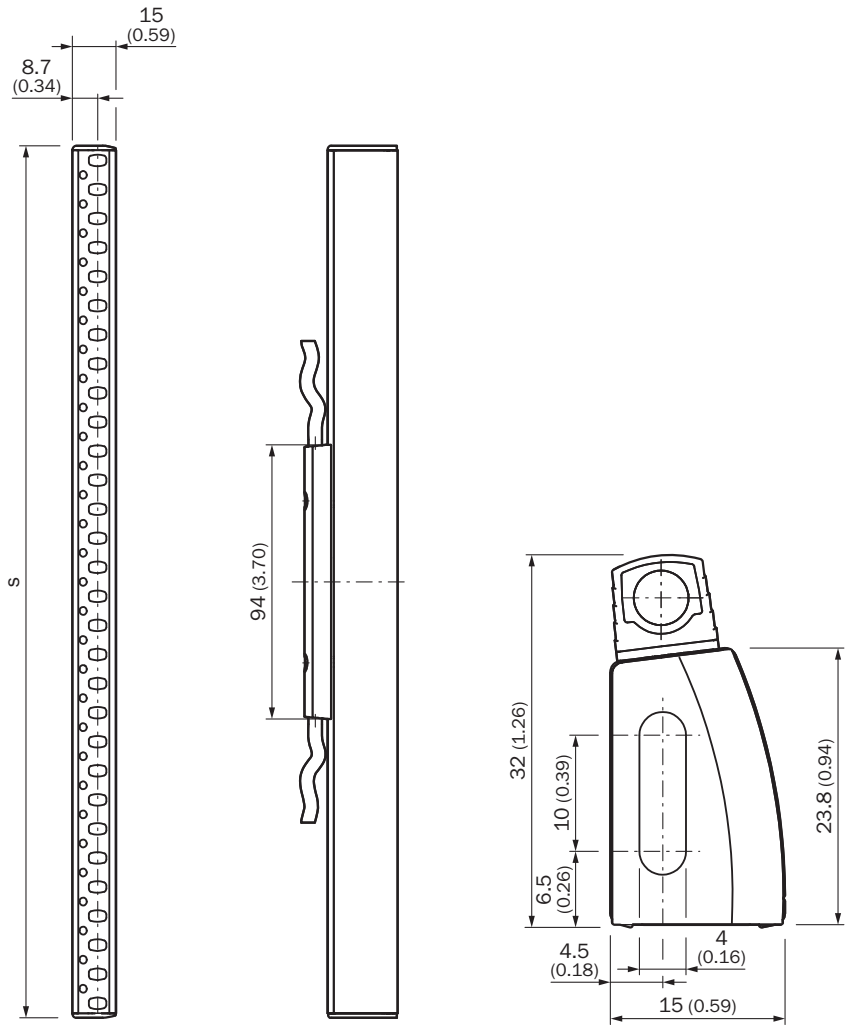

S = protective field height = housing length

Connection diagram

Sicherheitslichtvorhang miniTwin an Sicherheitsrelais RLY3-OSSD2, mit Wiederanlaufsperre und Schützkontrolle

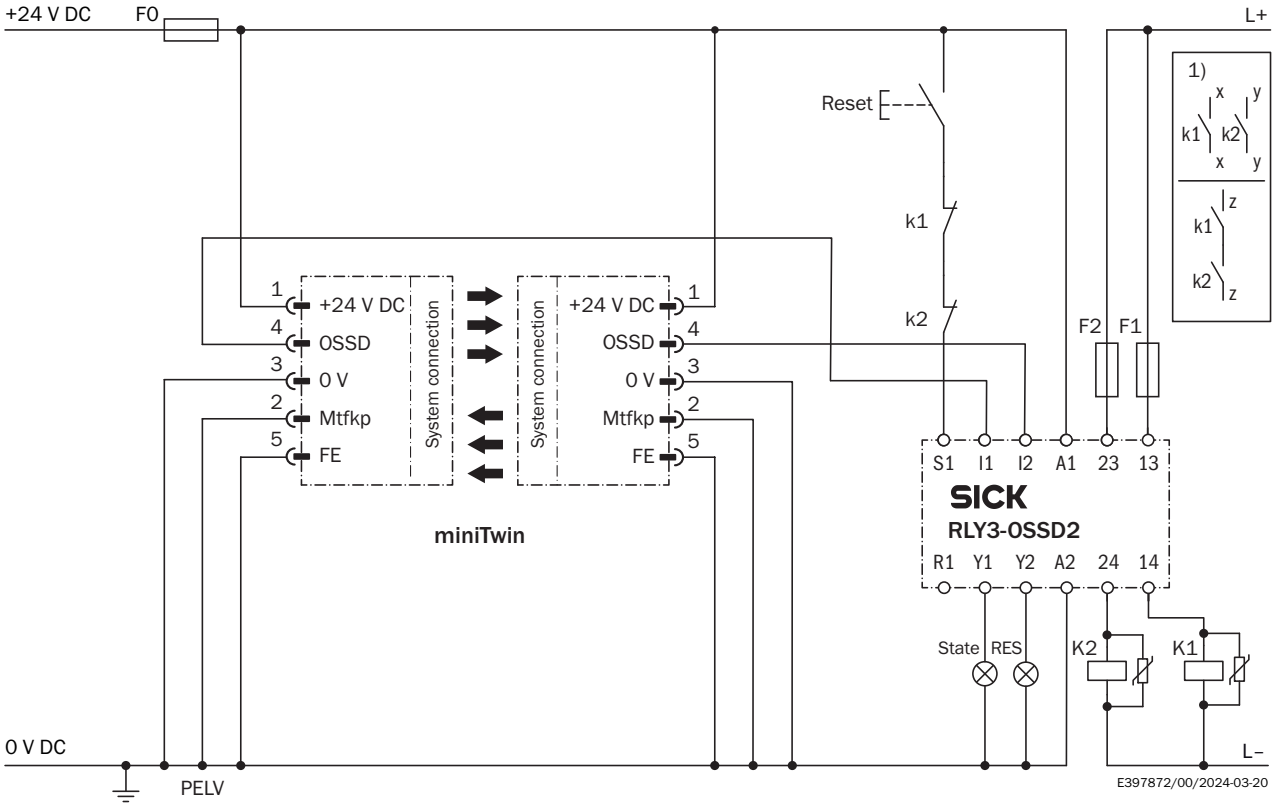

① Output circuits: These contacts must be incorporated into the control such that the dangerous state is brought to an end if the output circuit is open. For categories 4 and 3, they must be incorporated on dual-channels (x, y paths). Single-channel incorporation into the control (z path) is only possible with a single-channel control and taking the risk analysis into account.

Sicherheitslichtvorhang miniTwin an Sicherheitsrelais RLY3-OSSD1, mit Wiederanlaufsperre und Schützkontrolle

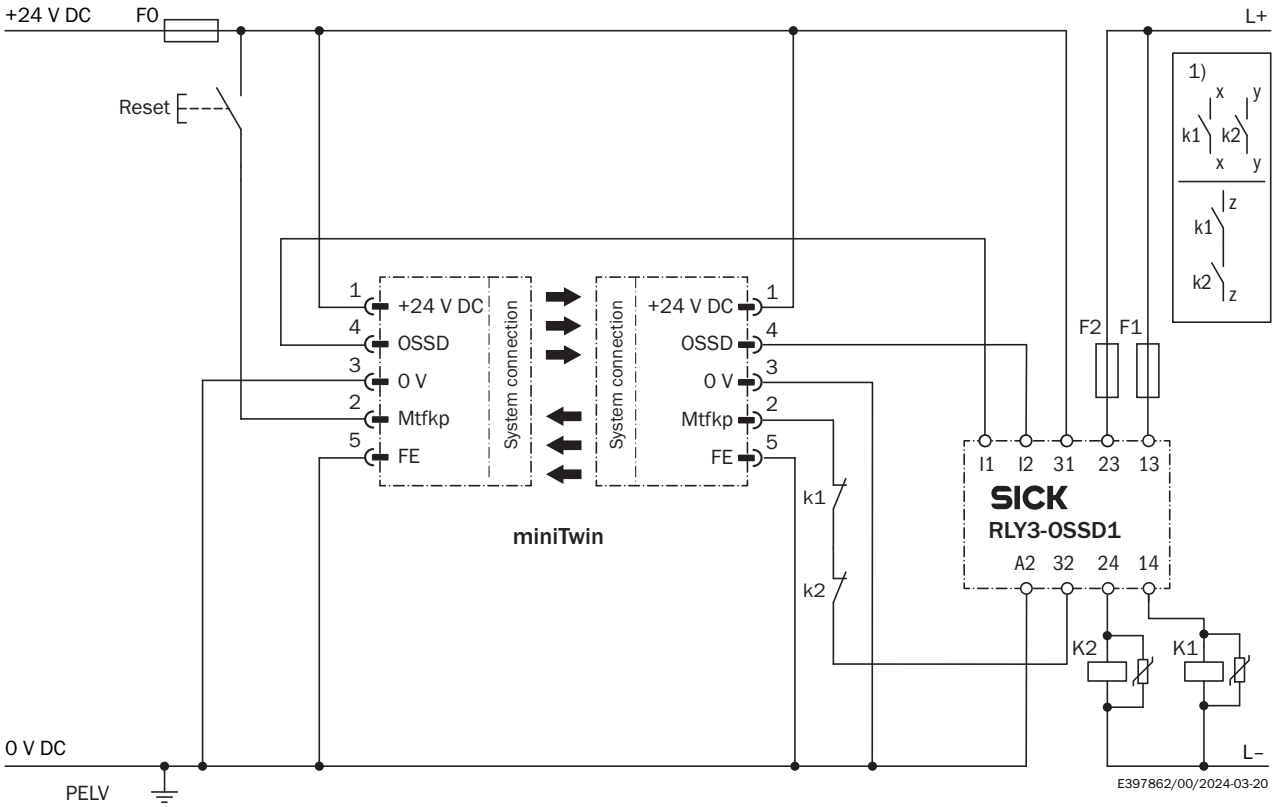

① Output circuits: These contacts must be incorporated into the control such that the dangerous state is brought to an end if the output circuit is open. For categories 4 and 3, they must be incorporated on dual-channels (x, y paths). Single-channel incorporation into the control (z path) is only possible with a single-channel control and taking the risk analysis into account.

Recommended accessories

Other models and accessories ➜ www.sick.com/miniTwin

	Brief description	Type	Part no.
Alignment aids			
	Laser alignment aid for various sensors, laser class 2 (IEC 60825). Do not look into the beam!, 19 mm x 67.3 mm x 66.9 mm	AR60	1015741
	Adapter AR60 for miniTwin4 and miniTwin2	AR60 adapter, miniTwin	4064710
Test and monitoring tools			
	14 mm diameter, 250 mm length	Test rod 14 mm	2022599
Mounting brackets and plates			
	2 pieces, Bracket for miniTwin, for all protective field heights, scope of delivery: 2 C-Fix brackets and 2 L-Fix brackets (suitable for 2 miniTwin devices)	BEF-3AAA0MKU2S04	2045843

	Brief description	Type	Part no.
	2 pieces, O-Fix bracket, 2 pieces, for all sizes, for all protective field heights	BEF-3SHAEMKU2	2045835
Others			
	• **Connection type head A:** Female connector, M12, 5-pin, straight • **Description:** Unshielded • **Connection systems:** Screw-type terminals • **Permitted cross-section:** ≤ 0.75 mm² • **Note:** Test voltage 1.0 kV eff/60 s, insulation group C to VDE 0110	DOS-1205-GX	6047950
	• **Connection type head A:** Male connector, M12, 5-pin, straight • **Description:** Unshielded, Head A: male connector, M12, 5-pin, straight, unshielded, for cable diameter 4 mm ... 6 mm Head B: - • **Connection systems:** Screw-type terminals • **Permitted cross-section:** ≤ 0.75 mm² • **Note:** For field bus technology	STE-1205-G	6022083
	• **Cable:** 160 mm • **Description:** Unshielded, miniTwin system plug for cascade, system connection: Cable with M12 male connector, 5-pin, extension connection: Cable with M12 female connector, 5-pin, length of cable: 160 mm each	Cascade system plug	2046452
	• **Cable:** 350 mm • **Description:** Unshielded, miniTwin system plug for cascade, system connection: Cable with M12 male connector, 5-pin, extension connection: Cable with M12 female connector, 5-pin, length of cable: 350 mm each	Cascade system plug	2046454
	• **Cable:** 700 mm • **Description:** Unshielded, miniTwin system plug for cascade, system connection: Cable with M12 male connector, 5-pin, extension connection: Cable with M12 female connector, 5-pin, length of cable: 700 mm each	Cascade system plug	2046456
	• **Cable:** 10 m • **Description:** Unshielded, miniTwin system plug for standalone, system connection: Cable, flying leads, 5-wire, length of cable: 10 m	Stand-alone system plug	2051290
	• **Connection type head A:** Female connector, M12, 5-pin, straight • **Description:** Unshielded, Head A: female connector, M12, 5-pin, straight, unshielded, for cable diameter 4 mm ... 6 mm Head B: - • **Connection systems:** Screw-type terminals • **Permitted cross-section:** ≤ 0.75 mm²	DOS-1205-G	6009719
	• **Connection type head A:** Female connector, M12, 5-pin, straight, A-coded • **Connection type head B:** Male connector, M12, 5-pin, straight, A-coded • **Signal type:** Sensor/actuator cable • **Cable:** 1 m, 5-wire, PUR, halogen-free • **Description:** Sensor/actuator cable, unshielded • **Application:** Zones with oils and lubricants, Drag chain operation, Robot	YF2A15-010UB5M2A15	2096007
	• **Connection type head A:** Female connector, M12, 5-pin, straight, A-coded • **Connection type head B:** Male connector, M12, 5-pin, straight, A-coded • **Signal type:** Sensor/actuator cable • **Cable:** 2 m, 5-wire, PUR, halogen-free • **Description:** Sensor/actuator cable, unshielded • **Application:** Zones with oils and lubricants, Drag chain operation, Robot	YF2A15-020UB5M2A15	2096009
	• **Connection type head A:** Female connector, M12, 5-pin, straight, A-coded • **Connection type head B:** Flying leads • **Signal type:** Sensor/actuator cable • **Cable:** 5 m, 5-wire, PVC • **Description:** Sensor/actuator cable, unshielded • **Application:** Zones with chemicals	YF2A15-050VB5XLEAX	2096240
	• **Connection type head A:** Female connector, M12, 5-pin, straight, A-coded • **Connection type head B:** Flying leads • **Signal type:** Sensor/actuator cable • **Cable:** 10 m, 5-wire, PVC • **Description:** Sensor/actuator cable, unshielded • **Application:** Zones with chemicals	YF2A15-100VB5XLEAX	2096241

	Brief description	Type	Part no.
	• **Connection type head A:** Female connector, M12, 5-pin, straight, A-coded • **Connection type head B:** Flying leads • **Signal type:** Sensor/actuator cable • **Cable:** 15 m, 5-wire, PVC • **Description:** Sensor/actuator cable, unshielded • **Application:** Zones with chemicals	YF2A15-150VB5XLEAX	2096242

SICK AT A GLANCE

SICK is one of the leading manufacturers of intelligent sensors and sensor solutions for industrial applications. A unique range of products and services creates the perfect basis for controlling processes securely and efficiently, protecting individuals from accidents and preventing damage to the environment.

We have extensive experience in a wide range of industries and understand their processes and requirements. With intelligent sensors, we can deliver exactly what our customers need. In application centers in Europe, Asia and North America, system solutions are tested and optimized in accordance with customer specifications. All this makes us a reliable supplier and development partner.

Comprehensive services complete our offering: SICK LifeTime Services provide support throughout the machine life cycle and ensure safety and productivity.

For us, that is "Sensor Intelligence."

WORLDWIDE PRESENCE:

Contacts and other locations –www.sick.com

SICK
Sensor Intelligence.