Product data sheet

TIM310-1030000

TiM

2D LIDAR SENSORS

SICK
Sensor Intelligence.

Ordering information

Type	Part no.
TIM310-1030000	1052627

Other models and accessories → www.sick.com/TiM

Detailed technical data

Features

Measurement principle	HDDM$^+$
Application	Indoor
Light source	Infrared (850 nm)
Laser class	1 (IEC 60825-1:2014, EN 60825-1:2014)
Aperture angle	
Horizontal	270°
Scanning frequency	15 Hz
Angular resolution	1°
Working range	0.05 m ... 4 m
Scanning range	
At 10% remission factor	2 m

Mechanics/electronics

Connection type	1 x 15-pin D-sub HD male connector (0.9 m)
Supply voltage	9 V DC ... 28 V DC
Power consumption	Typ. 4 W, 16 W with 4 max. loaded digital outputs
Output current	≤ 100 mA
Housing color	Light blue (RAL 5012)
Enclosure rating	IP65 (IEC 60529:1989+AMD1:1999+AMD2:2013)
Protection class	III (IEC 61140:2016-1)
Weight	150 g, without connecting cables
Dimensions (L x W x H)	60 mm x 60 mm x 79 mm
MTBF	> 100 years

Safety-related parameters

$MTTF_D$	100 years

Performance

Response time	1 scan, typ. 67 ms 2 scans, ≤ 134 ms [1]
Detectable object shape	Almost any
Systematic error	± 40 mm [2]
Statistical error	< 30 mm [2]
Integrated application	Field evaluation
Number of field sets	16 field triples (48 fields, 1 triple (3 fields) can be configured directly at the scanner)
Simultaneous evaluation cases	1 (3 fields)

[1] At +45° to +225° of the working range; max. 150 ms at –45° to +45° of the working range.
[2] Typical value at 90% remission up to maximum scanning range; real value depends on ambient conditions.

Interfaces

USB	✓
Remark	Micro USB
Function	Service interface, parameterization
Digital inputs	4
Digital outputs	3 (PNP, additional 1 x “Device Ready”)
Delay time	67 ms ... 30,000 ms (configurable)
Dwell time	67 ms ... 600,052 ms (configurable)
Optical indicators	2 LEDs (ON, switching status)

Ambient data

Object remission	4 % ... 1,000 % (reflectors)
Electromagnetic compatibility (EMC)	
Emitted radiation	Residential area (EN 61000-6-3:2007+AMD:A1:2011)
Electromagnetic immunity	Industrial environment (EN 61000-6-2:2005)
Vibration resistance	
Sine resonance scan	10 Hz ... 1,000 Hz [1]
Sine test	10 Hz ... 500 Hz, 5 g, 10 frequency cycles [1]
Noise test	10 Hz ... 250 Hz, 4.24 g RMS, 5 h [2]
Shock resistance	50 g, 11 ms, ± 3 single shocks/axis [3] 25 g, 6 ms, ± 1,000 continuous shocks/axis [3] 50 g, 3 ms, ± 5,000 continuous shocks/axis [3]
Ambient operating temperature	–10 °C ... +50 °C [4]
Storage temperature	–30 °C ... +70 °C [4]
Switch-on temperature	–10 °C ... +50 °C
Temperature change	–10 °C ... +50 °C, 10 cycles [5]

[1] IEC 60068-2-6:2007.
[2] IEC 60068-2-64:2008.
[3] IEC 60068-2-27:2008.
[4] IEC 60068-2-14:2009.
[5] EN 60068-2-14:2009.
[6] EN 60068-2-30:2005.

Damp heat	+25 °C ... +55 °C, 95 % RH, 6 cycles [6]
Permissible relative humidity	
Operation	< 80 %, Non-condensing (EN 60068-2-30:2005)
Storage	≤ 90 %, Non-condensing (EN 60068-2-30:2005)
Ambient light immunity	80,000 lx

[1] IEC 60068-2-6:2007.
[2] IEC 60068-2-64:2008.
[3] IEC 60068-2-27:2008.
[4] IEC 60068-2-14:2009.
[5] EN 60068-2-14:2009.
[6] EN 60068-2-30:2005.

General notes

Note on use	The sensor does not constitute a safety component as defined by relevant legislation on machine safety.

Classifications

ECLASS 5.0	27270990
ECLASS 5.1.4	27270990
ECLASS 6.0	27270913
ECLASS 6.2	27270913
ECLASS 7.0	27270913
ECLASS 8.0	27270913
ECLASS 8.1	27270913
ECLASS 9.0	27270913
ECLASS 10.0	27270913
ECLASS 11.0	27270913
ECLASS 12.0	27270913
ETIM 5.0	EC002550
ETIM 6.0	EC002550
ETIM 7.0	EC002550
ETIM 8.0	EC002550
UNSPSC 16.0901	41111615

Dimensional drawing (Dimensions in mm (inch))

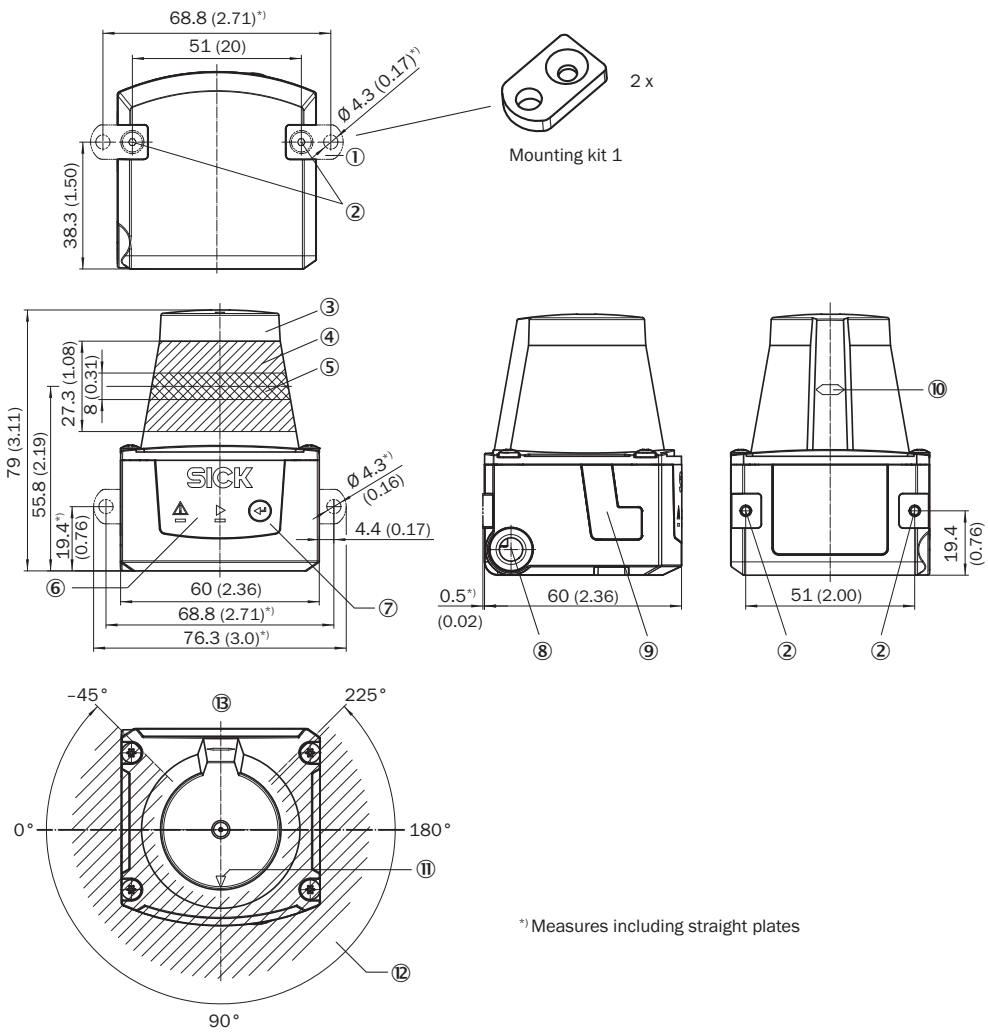

*) Measures including straight plates

① 2 x straight plates with M3 x 4 mm screw (included in delivery)
② M3 threaded mounting hole, 2.8 mm deep (blind hole thread), max. tightening torque 0.8 Nm
③ Optical hood
④ Receiving range (light inlet)
⑤ Transmission range (light emission)
⑥ Red and green LED (status displays)
⑦ Function button for teach-in
⑧ Connecting cable outlet (connection for power/digital inputs/outputs)
⑨ Micro USB female connector, type B
⑩ Marking for the position of the light emission level
⑪ Bearing marking to support alignment (90° axis)
⑫ Aperture angle 270° (scanning angle)
⑬ Area in which no reflective surfaces are allowed for mounted devices

Working range diagram

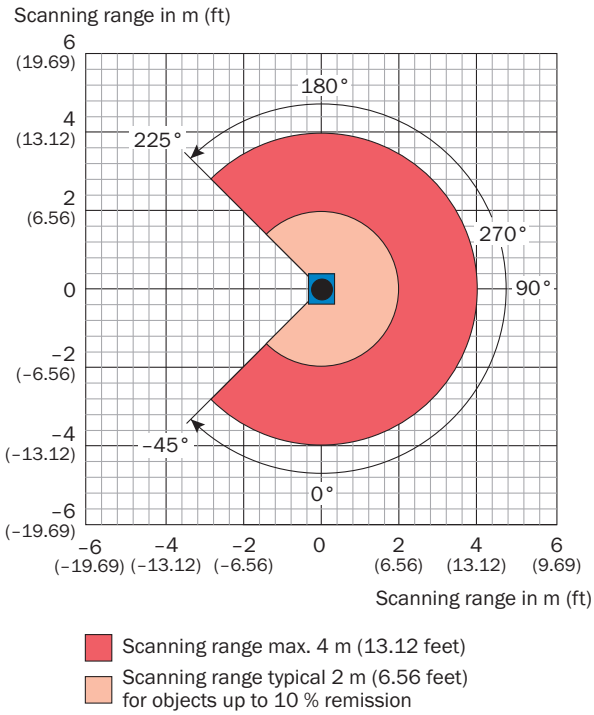

PIN assignment

Power I/O connection

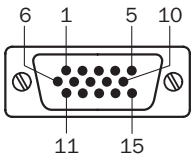

Cable, 15-pin D-Sub HD male connector

① DC 9 V ... 28 V
② nc
③ nc
④ OUT4
⑤ GND
⑥ nc
⑦ nc
⑧ In_1
⑨ In_2
⑩ In3
⑪ In4
⑫ OUT1
⑬ OUT2
⑭ OUT3
⑮ PNP: INGND, NPN: IN 9 V ... 28 V

Recommended accessories

Other models and accessories ➜ www.sick.com/TiM

	Brief description	Type	Part no.
Mounting brackets and plates			
	Mounting kit with shock absorber, Anodized aluminum, mounting hardware included	Mounting kit	2086074
Others			
	• **Connection type head A:** Female connector, D-Sub-HD, 15-pin, straight • **Connection type head B:** Flying leads • **Signal type:** Power, serial, CANopen, digital I/Os • **Cable:** 2 m, 15-wire, AWG26 • **Description:** Power, serial, CANopen, digital I/Os, shielded, extension cable	YFHDAC-020VD5XLEAX	2043413
	• **Connection type head A:** Male connector, USB-A • **Connection type head B:** Male connector, Micro-B • **Signal type:** USB 2.0 • **Cable:** 2 m • **Description:** USB 2.0, unshielded	USB cable	6036106
Modules			
	• **Sub product family:** CDB730 • **Supported products:** TiM3xx • **Brief description:** Small connection module for one sensor, 4 cable glands (only for TiM3xx-10xxxxx)	CDB730-001	1055981

Recommended services

Additional services ➜ www.sick.com/TiM

	Type	Part no.
Maintenance		
• **Product area:** 2D LiDAR sensors, 3D LiDAR sensors • **Range of services:** Inspection, analysis and restoring of defined functions, Inspection and adaptation of basic settings, parameters of field application, filters for raw data output, and product-specific configuration • **Duration:** Additional work will be invoiced separately • **Travel expenses:** The prices do not include travel costs such as hotel, flight, travel time and expenses.	Maintenance of LiDAR sensors	1682593
Commissioning		
• **Product area:** 2D LiDAR sensors, 3D LiDAR sensors • **Range of services:** Inspection of connection, fine adjustment, configuration of monitored areas, configuration and optimization of parameters as well as tests, Setup of previously defined functions of basic settings, parameters of field application, filters for raw data output and product-specific configuration • **Travel expenses:** The prices do not include travel costs such as hotel, flight, travel time and expenses. • **Duration:** Additional work will be invoiced separately	Commissioning LiDAR sensors	1680672
Extended warranty		
• **Product area:** Identification solutions, machine vision, Detection and ranging solutions, safety camera sensors, Safety laser scanners, Safety radar sensors • **Range of services:** The services correspond to the scope of the statutory manufacturer warranty (SICK general terms of delivery). • **Duration:** Five-year warranty from delivery date.	Extended warranty for a total of five years from delivery date	1680671

SICK AT A GLANCE

SICK is one of the leading manufacturers of intelligent sensors and sensor solutions for industrial applications. A unique range of products and services creates the perfect basis for controlling processes securely and efficiently, protecting individuals from accidents and preventing damage to the environment.

We have extensive experience in a wide range of industries and understand their processes and requirements. With intelligent sensors, we can deliver exactly what our customers need. In application centers in Europe, Asia and North America, system solutions are tested and optimized in accordance with customer specifications. All this makes us a reliable supplier and development partner.

Comprehensive services complete our offering: SICK LifeTime Services provide support throughout the machine life cycle and ensure safety and productivity.

For us, that is "Sensor Intelligence."

WORLDWIDE PRESENCE:

Contacts and other locations –www.sick.com

SICK
Sensor Intelligence.