Product data sheet

WL100-2P1439

W100-2

MINIATURE PHOTOELECTRIC SENSORS

SICK
Sensor Intelligence.

Illustration may differ

Ordering information

Type	Part no.
WL100-2P1439	6052360

Included in delivery: BEF-W100-A (1), P250 (1)

Other models and accessories → www.sick.com/W100-2

Detailed technical data

Features

Functional principle	Photoelectric retro-reflective sensor
Functional principle detail	Dual lens
Dimensions (W x H x D)	11 mm x 31 mm x 20 mm
Housing design (light emission)	Rectangular
Sensing range max.	0.01 m ... 7.2 m [1]
Sensing range	0.01 m ... 5.5 m [1]
Type of light	Visible red light
Light source	LED [2]
Light spot size (distance)	Ø 280 mm (4 m)
Wave length	632 nm
Adjustment	Potentiometer (Sensitivity)

[1] Reflector PL80A.
[2] Average service life: 100,000 h at T_U = +25 °C.

Mechanics/electronics

Supply voltage U_B	10 V DC ... 30 V DC [1]
Ripple	± 10 % [2]

[1] Limit values.
[2] May not exceed or fall below U_V tolerances.
[3] Without load.
[4] Signal transit time with resistive load.
[5] With light/dark ratio 1:1.
[6] Do not bend below 0 °C.
[7] A = V_S connections reverse-polarity protected.
[8] B = output reverse-polarity protected.
[9] D = outputs overcurrent and short-circuit protected.

Current consumption	30 mA [3]
Switching output	PNP
Switching mode	Light/dark switching
Switching mode selector	Selectable via light/dark rotary switch
Signal voltage PNP HIGH/LOW	U_V - 1,8 V / ca. 0 V
Output current $I_{max.}$	≤ 100 mA
Response time	≤ 0.5 ms [4]
Switching frequency	1,000 Hz [5]
Connection type	Cable, 3-wire, 2 m [6]
Cable material	PVC
Conductor cross section	0.18 mm²
Circuit protection	A [7] B [8] D [9]
Protection class	III
Polarisation filter	✓
Housing material	Plastic, ABS/PC/POM
Optics material	Plastic, PMMA
Enclosure rating	IP67
Items supplied	Mounting bracket BEF-W100-A
Ambient operating temperature	–25 °C ... +55 °C
Ambient temperature, storage	–40 °C ... +70 °C

[1] Limit values.
[2] May not exceed or fall below U_V tolerances.
[3] Without load.
[4] Signal transit time with resistive load.
[5] With light/dark ratio 1:1.
[6] Do not bend below 0 °C.
[7] A = V_S connections reverse-polarity protected.
[8] B = output reverse-polarity protected.
[9] D = outputs overcurrent and short-circuit protected.

Safety-related parameters

$MTTF_D$	954 years
DC_{avg}	0 %

Classifications

ECLASS 5.0	27270902
ECLASS 5.1.4	27270902
ECLASS 6.0	27270902
ECLASS 6.2	27270902
ECLASS 7.0	27270902
ECLASS 8.0	27270902
ECLASS 8.1	27270902
ECLASS 9.0	27270902

ECLASS 10.0	27270902
ECLASS 11.0	27270902
ECLASS 12.0	27270902
ETIM 5.0	EC002717
ETIM 6.0	EC002717
ETIM 7.0	EC002717
ETIM 8.0	EC002717
UNSPSC 16.0901	39121528

Adjustments

W100-2

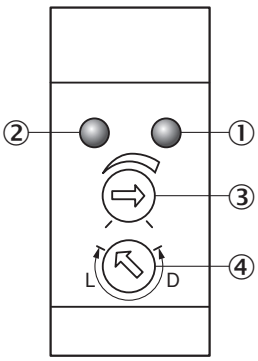

① LED indicator orange: switching output active
② LED indicator green: power on
③ Sensing range adjustment: potentiometer
④ Light/ dark rotary switch: L = light switching, D = dark switching

Connection diagram

Cd-043

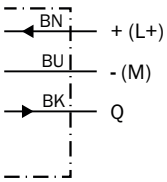

Characteristic curve

WL100-2

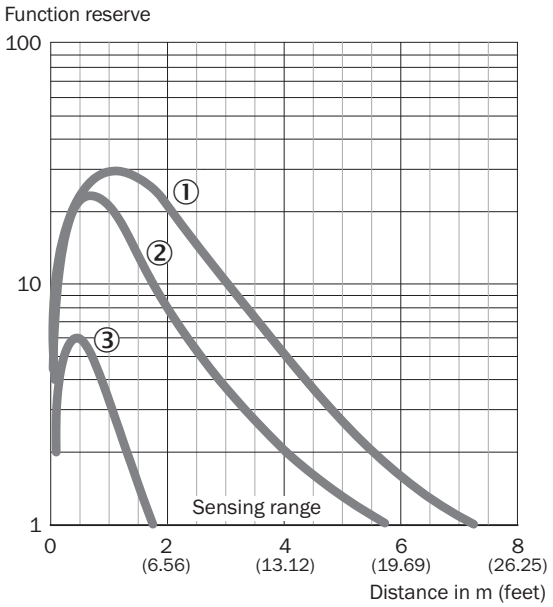

① Reflector PL80A
② Reflector P250
③ Diamond Grade reflective tape, 100 mm x 100 mm

Light spot size

Light spot size

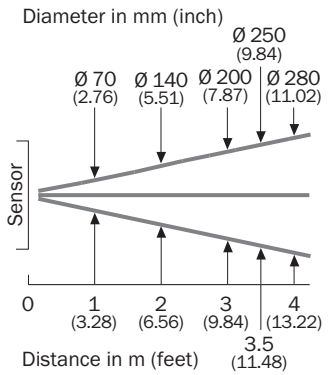

Sensing range diagram

WL100-2

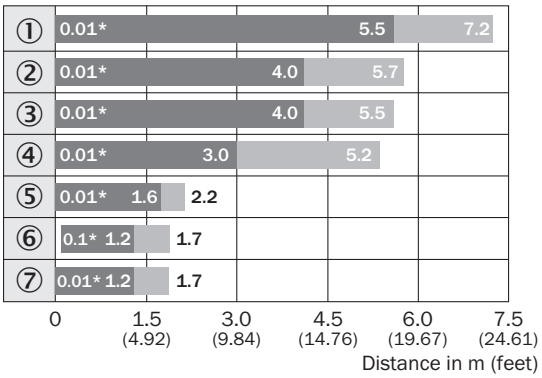

Sensing range Sensing range max.

*Close-up range at maximum sensitivity

① Reflector PL80A
② Reflector P250
③ Reflector PL50A, PL40A
④ Reflector PL30A, PL31A
⑤ Reflector PL20A
⑥ Reflective tape Diamond Grade
⑦ P45

Dimensional drawing (Dimensions in mm (inch))

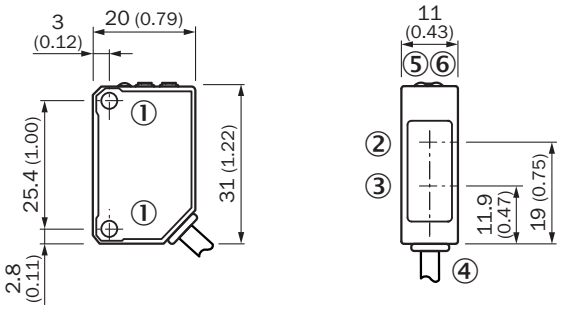

① Threaded mounting hole M3
② Center of optical axis, receiver
③ Center of optical axis, sender
④ Connection
⑤ LED indicator orange: switching output active
⑥ LED indicator green: power on

Recommended accessories

Other models and accessories ➜ www.sick.com/W100-2

	Brief description	Type	Part no.
Mounting brackets and plates			
	Mounting bracket for wall mounting, stainless steel, mounting hardware included	BEF-W100-A	5311520
	Mounting bracket for floor mounting, steel, zinc coated, mounting hardware included	BEF-W100-B	5311521
	Universal mounting bracket for reflectors, steel, zinc coated	BEF-WN-REFX	2064574
Plug connectors and cables			
	• **Connection type head A:** Male connector, M8, 3-pin, straight • **Description:** Unshielded • **Connection systems:** Screw-type terminals • **Permitted cross-section:** 0.14 mm² ... 0.5 mm²	STE-0803-G	6037322
Reflectors			
	Rectangular, screw connection, 51 mm x 61 mm, PMMA/ABS, Screw-on, 2 hole mounting	P250	5304812

SICK AT A GLANCE

SICK is one of the leading manufacturers of intelligent sensors and sensor solutions for industrial applications. A unique range of products and services creates the perfect basis for controlling processes securely and efficiently, protecting individuals from accidents and preventing damage to the environment.

We have extensive experience in a wide range of industries and understand their processes and requirements. With intelligent sensors, we can deliver exactly what our customers need. In application centers in Europe, Asia and North America, system solutions are tested and optimized in accordance with customer specifications. All this makes us a reliable supplier and development partner.

Comprehensive services complete our offering: SICK LifeTime Services provide support throughout the machine life cycle and ensure safety and productivity.

For us, that is "Sensor Intelligence."

WORLDWIDE PRESENCE:

Contacts and other locations –www.sick.com

SICK
Sensor Intelligence.