Product data sheet

OLM100-1201

OLM100 Hi

LINEAR MEASUREMENT SENSORS

SICK
Sensor Intelligence.

Ordering information

Type	Part no.
OLM100-1201	1053074

Other models and accessories → www.sick.com/OLM100_Hi

Detailed technical data

Mechanics/electronics

Supply voltage V_s	DC 10 V ... 30 V [1]
Ripple	≤ 5 V_{pp}
Power consumption	< 3 W
Initialization time	< 3 s
Enclosure rating	IP65
Protection class	III

[1] Limit values, reverse-polarity protected.

Performance

Measuring range	0 m ... 10,000 m [1]
Resolution	0.1 mm, 1 mm
Repeatability	0.15 mm [2]
Output time	1 ms
Light source	LED, red
Max. movement speed	7 m/s
Reading distance	100 mm, ± 20 mm
Barcode width	30 mm

[1] Dependent on the set resolution and transfer protocol.
[2] Statistical error 3 σ.

Interfaces

SSI	✓

Ambient data

Electromagnetic compatibility (EMC)	EN 61000-6-2 EN 61000-6-4
Ambient temperature, operation	–30 °C ... +60 °C [1]

[1] Temperatures < –20 °C with 5 min warm up time.
[2] Max. 95 % humidity, non-condensing.
[3] Typ. value at +25 °C ambient temperature.

Ambient temperature, storage	–40 °C ... +75 °C [2]
Typ. Ambient light immunity	≤ 5,000 lx [3]
Vibration resistance	DIN/EN 60068-2-6, DIN/EN 60068-2-64
Shock resistance	DIN/EN 60068-2-27

[1] Temperatures < –20 °C with 5 min warm up time.
[2] Max. 95 % humidity, non-condensing.
[3] Typ. value at +25 °C ambient temperature.

Classifications

eCl@ss 5.0	27270890
eCl@ss 5.1.4	27270890
eCl@ss 6.0	27270890
eCl@ss 6.2	27270890
eCl@ss 7.0	27270890
eCl@ss 8.0	27270890
eCl@ss 8.1	27270890
eCl@ss 9.0	27270890
eCl@ss 10.0	27270890
eCl@ss 11.0	27270890
eCl@ss 12.0	27280106
ETIM 5.0	EC001825
ETIM 6.0	EC001825
ETIM 7.0	EC001825
ETIM 8.0	EC001825
UNSPSC 16.0901	39121528

Dimensional drawing (Dimensions in mm (inch))

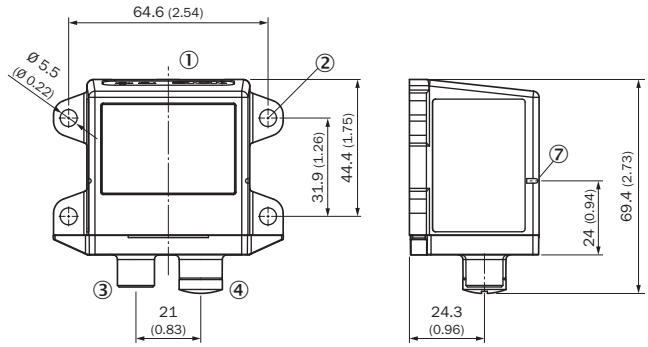

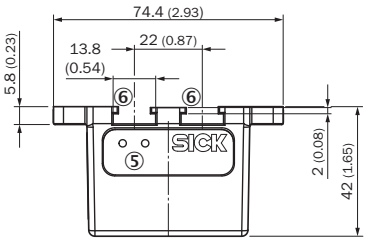

① Reference axis position measurement
② Mounting holes, Ø 5.5 mm
③ Connector M12, 5-pin
④ Ethernet M12 female connector, 4-pin
⑤ Status LED [status]
⑥ T-slot
⑦ Adjustment aid (slot)

Connection type

OLM100-10x1 OLM100-10x3 1 x socket M12, 4-pin 1 x connector M12, 8-pin

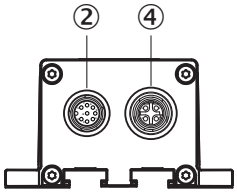

② RS-422, SSI
④ Ethernet

Connection diagram

OLM100-10x1 OLM100-10x3 1 x socket M12, 4-pin 1 x connector M12, 8-pin

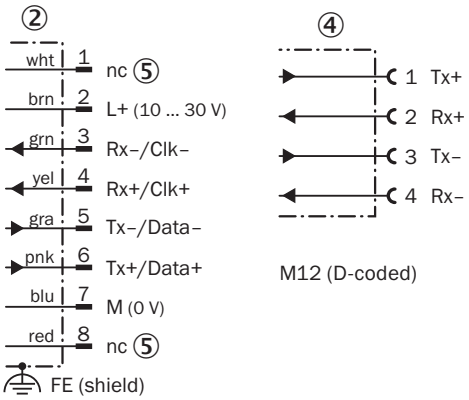

② RS-422, SSI
④ Ethernet
⑤ Not assigned

Recommended accessories

Other models and accessories ➜ www.sick.com/OLM100_Hi

	Brief description	Type	Part no.
Codes			
	30 mm, height: 25 mm, measuring range: customer-specific	Customer-specific bar code tape	5328960
	30 mm, height: 60 mm, measuring range: customer-specific	Customer-specific bar code tape	5327812
	30 mm, height: 100 mm, measuring range: customer-specific	Customer-specific bar code tape	5327576
	30 mm, height: 30 mm, measuring range: customer-specific	Customer-specific bar code tape	5322556
	30 mm, height: 40 mm, measuring range: customer-specific	Customer-specific bar code tape	5323951
Other mounting accessories			
	4 pieces, Sliding nut set, M5, 4x, Included in delivery	Sliding nuts	2017550
Plug connectors and cables			
	Head A: Flying leads Head B: Flying leads Cable: HIPERFACE®, PUR, halogen-free, shielded For DME with HIPERFACE® Interface	LTG-3108-MW	6032456
	Head A: female connector, M12, 8-pin, angled, A-coded Head B: Flying leads Cable: Sensor/actuator cable, PVC, shielded, 5 m	YG2A28-050VA6XLEAX	2096219

	Brief description	Type	Part no.
	Head A: male connector, M12, 4-pin, angled, D-coded Head B: male connector, RJ45, 8-pin, straight Cable: Ethernet, PUR, halogen-free, shielded, 2 m	SSL-2J04-H02ME	6047911
	Head A: male connector, M12, 4-pin, straight, D-coded Head B: male connector, RJ45, 4-pin, straight Cable: Ethernet, PROFINET, PUR, halogen-free, shielded, 2 m	YM2D24-020PN1MRJA4	2106182
	Head A: female connector, M12, 8-pin, straight, A-coded Cable: Incremental, SSI, shielded	DOS-1208-GA01	6045001
	Head A: male connector, M12, 8-pin, straight Cable: shielded	STE-1208-GA	6028370

Recommended services

Additional services ➜ www.sick.com/OLM100_Hi

	Type	Part no.
Warranty extensions		
• **Product area:** Identification solutions, machine vision, Distance sensors, Detection and ranging solutions • **Range of services:** The services correspond to the scope of the statutory manufacturer warranty (SICK general terms of delivery). • **Duration:** Five-year warranty from delivery date.	Extended warranty for a total of five years from delivery date	1680671

SICK AT A GLANCE

SICK is one of the leading manufacturers of intelligent sensors and sensor solutions for industrial applications. A unique range of products and services creates the perfect basis for controlling processes securely and efficiently, protecting individuals from accidents and preventing damage to the environment.

We have extensive experience in a wide range of industries and understand their processes and requirements. With intelligent sensors, we can deliver exactly what our customers need. In application centers in Europe, Asia and North America, system solutions are tested and optimized in accordance with customer specifications. All this makes us a reliable supplier and development partner.

Comprehensive services complete our offering: SICK LifeTime Services provide support throughout the machine life cycle and ensure safety and productivity.

For us, that is "Sensor Intelligence."

WORLDWIDE PRESENCE:

Contacts and other locations –www.sick.com

SICK
Sensor Intelligence.