Product data sheet

CLV690-0000

CLV69x

FIXED MOUNT BARCODE SCANNERS

SICK
Sensor Intelligence.

Ordering information

Type	Part no.
CLV690-0000	1056600

Other models and accessories → www.sick.com/CLV69x

Detailed technical data

Features

Version	Standard Density
Connection type	Depending on the cloning plug used
Reading field	Front
Sensor type	Line scanner
Optical focus	Auto focus (alternative: dynamic focus control)
No. of distance configurations	≤ 8
Focus adjustment time	≤ 20 ms
Focus trigger source	Data interface / Digital inputs
Light source	Light spot, laser, Visible, Red, 660 nm
Laser class	2 (IEC 60825-1:2014, EN 60825-1:2014)
Aperture angle	≤ 60°
Reading distance	500 mm ... 2,100 mm [1]
Scanning frequency	400 Hz ... 1,200 Hz
Code resolution	0.3 mm ... 1 mm

[1] For details see reading field diagram.

Mechanics/electronics

Connection type	Depending on the cloning plug used
Supply voltage	18 V DC ... 30 V DC
Power consumption	15 W
Housing	Aluminum die cast
Housing color	Light blue (RAL 5012)
Window material	Glass
Enclosure rating	IP65 (EN 60529/A1 (2002-02))

[1] At 25 °C.

Weight	1,500 g
Dimensions (L x W x H)	117 mm x 117 mm x 94 mm
MTBF	100,000 h
MTTF	40,000 h (Laser diode) [1]

[1] At 25 °C.

Performance

Readable code structures	1D codes
Bar code types	Interleaved 2 of 5, all current code types, Codabar, Code 128, Code 39, Code 93, GS1-128 / EAN 128, UPC / GTIN / EAN
Code printing process	Label (printed codes)
Print ratio	2:1 ... 3:1
No. of codes per scan	1 ... 20 (Standard decoder) 1 ... 6 (SMART decoder)
No. of codes per reading interval	1 ... 50 (auto-discriminating)
No. of characters per reading interval	5,000
No. of multiple readings	1 ... 100

Interfaces

Ethernet	✓, TCP/IP
Remark	Only with cloning plug I/O, CAN IN/OUT or CAN Redundant
Function	Data interface (read result output), Service interface
Data transmission rate	10/100 MBit/s
PROFINET	✓
Type of fieldbus integration	Optional over external fieldbus module CDF600-2
Remark	Only with cloning plug I/O, CAN IN/OUT or CAN Redundant
Function	PROFINET Single Port, PROFINET Dual Port
EtherNet/IP™	✓
Remark	Only with cloning plug I/O, CAN IN/OUT or CAN Redundant
Data transmission rate	10/100 MBit/s
Serial	✓, RS-232, RS-422, RS-485
Remark	Only with cloning plug D-Sub and Ethernet
Function	Data interface (read result output), AUX (only RS-232)
Data transmission rate	0.3 kBaud ... 115.2 kBaud, AUX: 57.6 kBaud (RS-232)
CAN	✓
Function	SICK CAN sensor network CSN (CAN controller/CAN device, multiplexer/server)
Data transmission rate	20 kbit/s ... 1 Mbit/s
PROFIBUS DP	✓
Type of fieldbus integration	Optional over external fieldbus module CDF600-2
Digital inputs	6 (“Sensor 1” ... “Sensor 6”)
Digital outputs	4 (“Result 1” ... “Result 4”)
Reading pulse	Digital inputs, serial interface, auto pulse, CAN
Optical indicators	6 LEDs (Ready, Result, laser, Data, CAN, LNK TX, Bar graph for displaying the reading rate percentage (10 LEDs))

Control elements	2 buttons
Parameter storage	Integrated in cloning plug
Configuration software	SOPAS ET

Ambient data

Electromagnetic compatibility (EMC)	EN 61000-6-4 (2007-01) + A1 (2011), EN 61000-6-2:2005-08
Vibration resistance	EN 60068-2-6:2008-02
Shock resistance	EN 60068-2-27:2009-05
Ambient operating temperature	0 °C ... +40 °C
Storage temperature	–20 °C ... +70 °C
Permissible relative humidity	90 %, Non-condensing
Ambient light immunity	2,000 lx, on barcode
Bar code print contrast (PCS)	≥ 60 %

Classifications

ECLASS 5.0	27280102
ECLASS 5.1.4	27280102
ECLASS 6.0	27280102
ECLASS 6.2	27280102
ECLASS 7.0	27280102
ECLASS 8.0	27280102
ECLASS 8.1	27280102
ECLASS 9.0	27280102
ECLASS 10.0	27280102
ECLASS 11.0	27280102
ECLASS 12.0	27280102
ETIM 5.0	EC002550
ETIM 6.0	EC002550
ETIM 7.0	EC002550
ETIM 8.0	EC002550
UNSPSC 16.0901	43211701

Dimensional drawing (Dimensions in mm (inch))

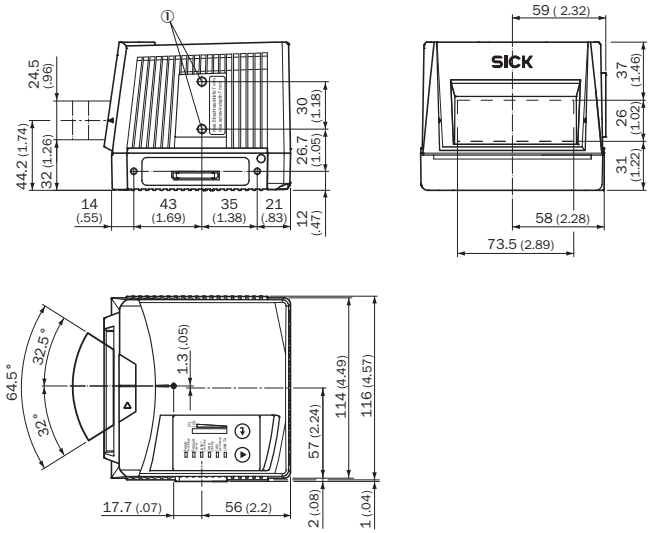

① M6 blind tapped holes, 7 mm deep (2 x), for mounting

Reading field diagram

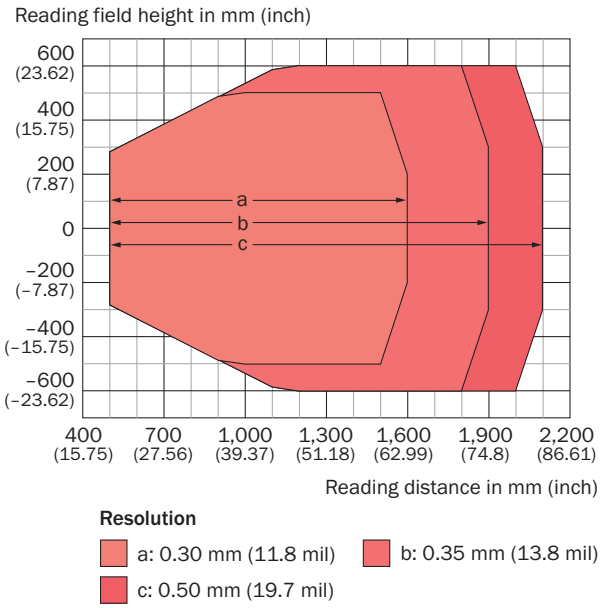

Recommended accessories

Other models and accessories ➜ www.sick.com/CLV69x

	Brief description	Type	Part no.
Cloning modules			
	External parameter memory for integration in CDB620/CDB650/CDM42x	CMC600-101	1042259
Mounting brackets and plates			
	Mounting support with integrated vibration/shock absorption for suspended mounting (absorber elements above the CLV)	Mounting bracket with vibration/shock absorption for CLV69x	2088163
Plug connectors and cables			
	• **Connection type head A:** Male connector, M12, 4-pin, straight, D-coded • **Connection type head B:** Male connector, RJ45, 4-pin, straight • **Signal type:** Ethernet, PROFINET • **Cable:** 2 m, 4-wire, PUR, halogen-free • **Description:** Ethernet, PROFINET, shielded • **Application:** Drag chain operation, Zones with oils and lubricants	YM2D24-020PN1MRJA4	2106182
Terminal and alignment brackets			
	Quick-action lock system, mounting hardware included	Quick release	2016110
	• **Connection type head A:** Male connector, male connector, female connector, M12, M12, M12, 17-pin, 5-pin, 4-pin • **Signal type:** Power, Ethernet, serial, CAN, digital I/Os • **Description:** Power, Ethernet, serial, CAN, digital I/Os, Required for connecting the CLV69x to the CDM420-006/7/8, CDB650, and CDF600-2 • **Note:** Plug housing I/O, Ethernet • **Items supplied:** With three M12 round connectors (17-pin male connector, 4-pin Ethernet female connector, 5-pin CAN male connector)	Cloning plug	2062452
	• **Connection type head A:** Female connector, M12, 17-pin, straight, A-coded • **Connection type head B:** Male connector, M12, 17-pin, straight, A-coded • **Signal type:** Power, serial, CAN, digital I/Os • **Cable:** 2 m, suitable for refrigeration • **Description:** Power, serial, CAN, digital I/Os, suitable for 2 A, shielded	YM2A8D-020XXXF2A8D	6053230
Modules			
	• **Sub product family:** CDB650 • **Supported products:** Lector® series, CLV62x - CLV64x (depending on type), CLV69x, RFID read/write device, InspectorP series • **Brief description:** Connection device basic for connecting one sensor with 2 A fuse, 5 cable glands and RS-232 interface to sensor via M12, 17-pin female connector, all outputs available on screw/spring-loaded terminals.	CDB650-204	1064114

Recommended services

Additional services ➜ www.sick.com/CLV69x

	Type	Part no.
Performance check		
• **Product area:** Fixed mount barcode scanners • **Range of services:** Inspection of defined functions, e.g., reading performance • **Travel expenses:** The prices do not include travel costs such as hotel, flight, travel time and expenses. • **Duration:** Additional work will be invoiced separately	Performance check CLV4xx/CLV6xx	1682028
Commissioning		
• **Product area:** Fixed mount barcode scanners • **Range of services:** Inspection of connection, fine adjustment, optimization of parameters of SICK product as well as tests, Setup of previously defined functions of reading configuration, code configuration, data processing and network, interfaces or inputs and outputs • **Travel expenses:** The prices do not include travel costs such as hotel, flight, travel time and expenses. • **Duration:** Additional work will be invoiced separately	Commissioning CLV65x ... CLV69x	1681926
Service agreements		
• **Product area:** Robot guidance systems, Track and trace systems, Driver assistance systems, Object detection systems, Profiling systems, Gateway systems, Quality control systems • **Range of services:** Maintenance, Troubleshooting, extended warranty, 8/5 remote support, 8/5 help desk • **Duration:** Duration is arranged individually with the customer and defined in the contract	Bronze service agreements for Systems	1616164
• **Product area:** Fixed mount barcode scanners • **Range of services:** According to the scope defined in the contract, for example extended warranty, repair service, availability guarantee as well as spare parts provided periodically by SICK (bracket with shock absorber), Other possible contractual elements • **Duration:** 5 year duration from delivery date of the initial hardware	Forklift Package CLV69x for 5 years	1614613
Extended warranty		
• **Product area:** Identification solutions, machine vision, Detection and ranging solutions, safety camera sensors, Safety laser scanners, Safety radar sensors • **Range of services:** The services correspond to the scope of the statutory manufacturer warranty (SICK general terms of delivery). • **Duration:** Five-year warranty from delivery date.	Extended warranty for a total of five years from delivery date	1680671

SICK AT A GLANCE

SICK is one of the leading manufacturers of intelligent sensors and sensor solutions for industrial applications. A unique range of products and services creates the perfect basis for controlling processes securely and efficiently, protecting individuals from accidents and preventing damage to the environment.

We have extensive experience in a wide range of industries and understand their processes and requirements. With intelligent sensors, we can deliver exactly what our customers need. In application centers in Europe, Asia and North America, system solutions are tested and optimized in accordance with customer specifications. All this makes us a reliable supplier and development partner.

Comprehensive services complete our offering: SICK LifeTime Services provide support throughout the machine life cycle and ensure safety and productivity.

For us, that is "Sensor Intelligence."

WORLDWIDE PRESENCE:

Contacts and other locations –www.sick.com

SICK
Sensor Intelligence.