Product data sheet

IMB18-08BPSVU2S

IMB

INDUCTIVE PROXIMITY SENSORS

SICK
Sensor Intelligence.

Illustration may differ

Ordering information

Type	Part no.
IMB18-08BPSVU2S	1072813

Included in delivery: BEF-MU-M18N (1)

Other models and accessories → www.sick.com/IMB

Detailed technical data

Features

Housing	Metric
Housing	Standard design
Thread size	M18 x 1
Diameter	Ø 18 mm
Sensing range S_n	8 mm
Safe sensing range S_a	6.48 mm
Installation type	Quasi-flush [1]
Switching frequency	1,000 Hz
Connection type	Cable, 3-wire, 2 m
Switching output	PNP
Output function	NO
Electrical wiring	DC 3-wire
Enclosure rating	IP68 [2] IP69K [3]
Special features	Resistant against coolant lubricants, Visual adjustment indicator, IO-Link, Temperature resistance
Special applications	Zones with coolants and lubricants, Mobile machines, Difficult application conditions
Items supplied	Mounting nut, V2A stainless steel, with locking teeth (2x)

[1] When installed in conductive materials, the sensors must protrude by distance E (E = 2 mm).
[2] According to EN 60529.
[3] According to ISO 20653:2013-03.

Mechanics/electronics

Supply voltage	10 V DC ... 30 V DC
Ripple	≤ 10 %
Voltage drop	≤ 2 V [1]
Hysteresis	3 % ... 20 %
Reproducibility	≤ 2 % [2] [3]
Temperature drift (of S_r)	± 10 %
EMC	According to EN 60947-5-2
Continuous current I_a	≤ 200 mA
No load current	≤ 10 mA
Cable material	PUR
Conductor size	0.34 mm²
Cable diameter	Ø 4.5 mm
Short-circuit protection	✓
Reverse polarity protection	✓
Power-up pulse protection	✓
Shock and vibration resistance	100 g / 2 ms / 500 cycles; 150 g / 1 Mio cycles; 10 Hz ... 55 Hz / 1 mm; 55 Hz ... 500 Hz / 60 g
Ambient operating temperature	–40 °C ... +100 °C
Housing material	Stainless steel V2A, DIN 1.4305 / AISI 303
Sensing face material	Plastic, LCP
Housing length	50 mm
Thread length	45 mm
Tightening torque, max.	Typ. 60 Nm [4] Typ. 90 Nm [5]
Protection class	III
UL File No.	E181493

[1] At I_a max.
[2] Supply voltage U_B and constant ambient temperature Ta.
[3] Of Sr.
[4] When using the non-toothed side of the nut.
[5] Valid if toothed side of nut is used.

Safety-related parameters

$MTTF_D$	1,971 years
DC_{avg}	0 %

Communication interface

Communication interface	IO-Link V1.0
Communication Interface detail	COM2 (38,4 kBaud)
Process data length	1 Byte
Process data structure	Bit 0 = Sr reached Bit 1 = Sa reached

Reduction factors

Note	The values are reference values which may vary
St37 steel (Fe)	1
Stainless steel (V2A, 304)	Approx. 0.55
Aluminum (Al)	Approx. 0.24
Copper (Cu)	Approx. 0.19
Brass (Br)	Approx. 0.24

Installation note

Remark	Associated graphic see "Installation"
A	9 mm
B	18 mm
C	18 mm
D	24 mm
E	2 mm
F	64 mm

Classifications

ECLASS 5.0	27270101
ECLASS 5.1.4	27270101
ECLASS 6.0	27270101
ECLASS 6.2	27270101
ECLASS 7.0	27270101
ECLASS 8.0	27270101
ECLASS 8.1	27270101
ECLASS 9.0	27270101
ECLASS 10.0	27270101
ECLASS 11.0	27270101
ECLASS 12.0	27274001
ETIM 5.0	EC002714
ETIM 6.0	EC002714
ETIM 7.0	EC002714
ETIM 8.0	EC002714
UNSPSC 16.0901	39122230

Adjustments

Installation aid

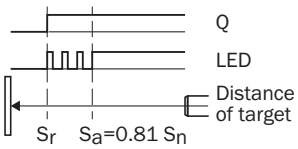

Installation note

Quasi-flush installation

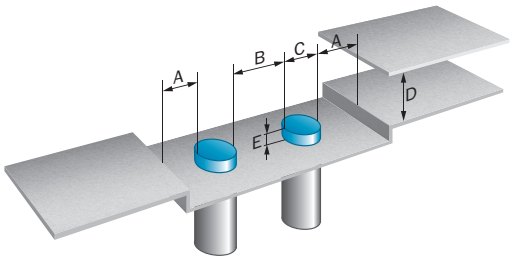

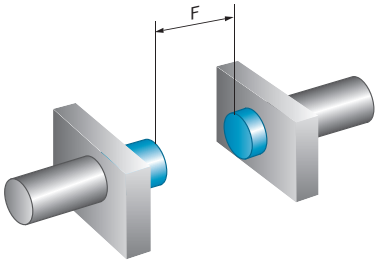

Connection diagram

Cd-452

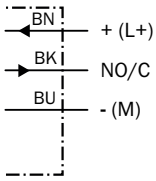

Response diagram

Response diagram

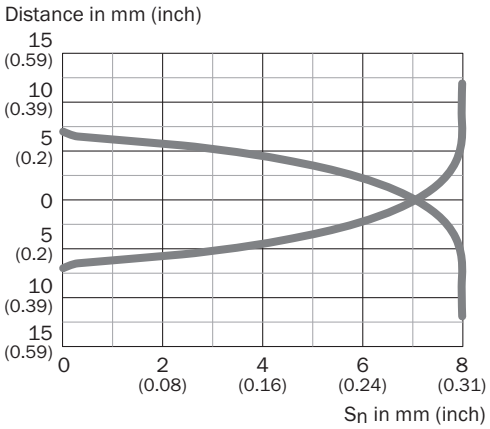

Dimensional drawing (Dimensions in mm (inch))

IMB18 Standard, cable, flush

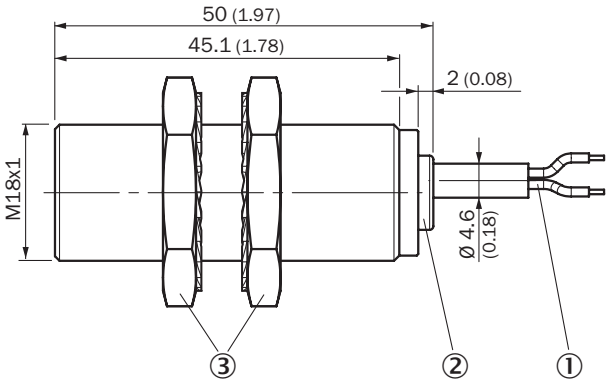

① Connection
② Display LED
③ Fastening nuts (2 x); width across 24, stainless steel V2A

Recommended accessories

Other models and accessories ➜ www.sick.com/IMB

	Brief description	Type	Part no.
Universal bar clamp systems			
	Plate N06N for universal clamp bracket, M18, Stainless steel 1.4571 (sheet), Stainless steel 1.4408 (clamp), Universal clamp (5322627), mounting hardware	BEF-KHS-N06N	2051622
Mounting brackets and plates			
	Mounting plate for M18 sensors, stainless steel, without mounting hardware	BEF-WG-M18N	5320948
	Mounting bracket for M18 sensors, stainless steel, without mounting hardware	BEF-WN-M18N	5320947
Others			
	• **Connection type head A:** Female connector, M12, 4-pin, straight • **Description:** Unshielded • **Connection systems:** Screw-type terminals • **Permitted cross-section:** ≤ 0.75 mm² • **Application:** Hygienic and washdown zones	DOS-1204-GN	6028357
	• **Connection type head A:** Female connector, M12, 4-pin, angled • **Description:** Unshielded • **Connection systems:** Screw-type terminals • **Permitted cross-section:** ≤ 0.75 mm² • **Application:** Hygienic and washdown zones	DOS-1204-WN	6028358
	• **Connection type head A:** Male connector, M12, 4-pin, straight • **Description:** Unshielded • **Connection systems:** Screw-type terminals • **Permitted cross-section:** ≤ 0.75 mm² • **Application:** Hygienic and washdown zones	STE-1204-GN	6028359

	Brief description	Type	Part no.
	• **Connection type head A:** Male connector, M12, 4-pin, straight • **Description:** Unshielded • **Connection systems:** Screw-type terminals • **Permitted cross-section:** ≤ 0.75 mm² • **Note:** For 2 cable connections • **Application:** Hygienic and washdown zones	STE-1204-TN	6028360

Recommended services

Additional services ➜ www.sick.com/IMB

	Type	Part no.
Function Block Factory		
• **Description:** The Function Block Factory supports common programmable logic controllers (PLCs) from various manufacturers, such as Siemens, Beckhoff, Rockwell Automation and B&R. More information on the FBF can be found here. • **Note:** You can configure your function block at Function Block Factory. As a login please use your SICK ID.	Function Block Factory	On request

SICK AT A GLANCE

SICK is one of the leading manufacturers of intelligent sensors and sensor solutions for industrial applications. A unique range of products and services creates the perfect basis for controlling processes securely and efficiently, protecting individuals from accidents and preventing damage to the environment.

We have extensive experience in a wide range of industries and understand their processes and requirements. With intelligent sensors, we can deliver exactly what our customers need. In application centers in Europe, Asia and North America, system solutions are tested and optimized in accordance with customer specifications. All this makes us a reliable supplier and development partner.

Comprehensive services complete our offering: SICK LifeTime Services provide support throughout the machine life cycle and ensure safety and productivity.

For us, that is "Sensor Intelligence."

WORLDWIDE PRESENCE:

Contacts and other locations –www.sick.com

SICK
Sensor Intelligence.