Product data sheet

# IME18-08BD0ZC0S

IME

INDUCTIVE PROXIMITY SENSORS

SICK
Sensor Intelligence.

## Ordering information

| Type | Part no. |
|---|---|
| IME18-08BD0ZC0S | 1067206 |

**Included in delivery:** BEF-MU-M18 (1)

Other models and accessories → www.sick.com/IME

## Detailed technical data

### Features

| | |
|---|---|
| **Housing** | Cylindrical thread design |
| **Housing** | Standard design |
| **Thread size** | M18 x 1 |
| **Diameter** | Ø 18 mm |
| **Sensing range $S_n$** | 8 mm |
| **Safe sensing range $S_a$** | 6.48 mm |
| **Installation type** | Flush |
| **Switching frequency** | 1,000 Hz |
| **Connection type** | Male connector M12, 4-pin |
| **Output function** | NC |
| **Electrical wiring** | DC 2-wire |
| **Enclosure rating** | IP67 [1] |
| **Items supplied** | Mounting nut, brass, nickel-plated (2x) |

[1] According to EN 60529.

### Mechanics/electronics

| | |
|---|---|
| **Supply voltage** | 10 V DC ... 30 V DC |
| **Ripple** | ≤ 10 % |
| **Voltage drop** | ≤ 4 V [1]<br>≤ 4.5 V [2] |
| **Time delay before availability** | ≤ 100 ms |

[1] At $I_a$ = 30 mA.
[2] At $I_a$ max.
[3] Supply voltage $U_B$ and constant ambient temperature Ta.
[4] Of Sr.

| | |
|---|---|
| **Hysteresis** | 5 % ... 15 % |
| **Reproducibility** | ≤ 2 % [3) 4)] |
| **Temperature drift (of $S_r$)** | ± 10 % |
| **EMC** | According to EN 60947-5-2 |
| **Continuous current $I_a$** | ≤ 100 mA |
| **Off-state current** | ≤ 0.8 mA |
| **Minimum load current** | ≥ 3 mA |
| **Short-circuit protection** | ✓ |
| **Reverse polarity protection** | ✓ |
| **Power-up pulse** | ≤ 5 ms |
| **Shock and vibration resistance** | 30 g, 11 ms/10 Hz ... 55 Hz, 1 mm |
| **Ambient operating temperature** | –25 °C ... +75 °C |
| **Housing material** | Brass, nickel-plated |
| **Sensing face material** | Plastic, PA 66 |
| **Housing length** | 69 mm |
| **Thread length** | 52 mm |
| **Tightening torque, max.** | ≤ 40 Nm |
| **UL File No.** | NRKH.E181493 |

[1)] At $I_a$ = 30 mA.
[2)] At $I_a$ max.
[3)] Supply voltage $U_B$ and constant ambient temperature Ta.
[4)] Of Sr.

## Safety-related parameters

| | |
|---|---|
| **$MTTF_D$** | 1,103 years |
| **$DC_{avg}$** | 0 % |
| **$T_M$ (mission time)** | 20 years |

## Reduction factors

| | |
|---|---|
| **Note** | The values are reference values which may vary |
| **St37 steel (Fe)** | 1 |
| **Stainless steel (V2A, 304)** | Approx. 0.8 |
| **Aluminum (Al)** | Approx. 0.45 |
| **Copper (Cu)** | Approx. 0.4 |
| **Brass (Br)** | Approx. 0.4 |

## Installation note

| | |
|---|---|
| **Remark** | Associated graphic see "Installation" |
| **B** | 36 mm |
| **C** | 18 mm |
| **D** | 24 mm |
| **F** | 64 mm |

## Classifications

| | |
|---|---|
| **ECLASS 5.0** | 27270101 |
| **ECLASS 5.1.4** | 27270101 |
| **ECLASS 6.0** | 27270101 |
| **ECLASS 6.2** | 27270101 |
| **ECLASS 7.0** | 27270101 |
| **ECLASS 8.0** | 27270101 |
| **ECLASS 8.1** | 27270101 |
| **ECLASS 9.0** | 27270101 |
| **ECLASS 10.0** | 27270101 |
| **ECLASS 11.0** | 27270101 |
| **ECLASS 12.0** | 27274001 |
| **ETIM 5.0** | EC002714 |
| **ETIM 6.0** | EC002714 |
| **ETIM 7.0** | EC002714 |
| **ETIM 8.0** | EC002714 |
| **UNSPSC 16.0901** | 39122230 |

## Installation note

Flush installation

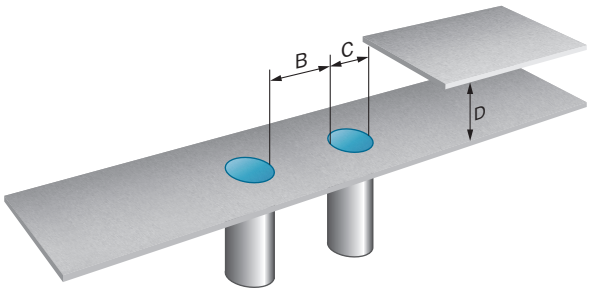


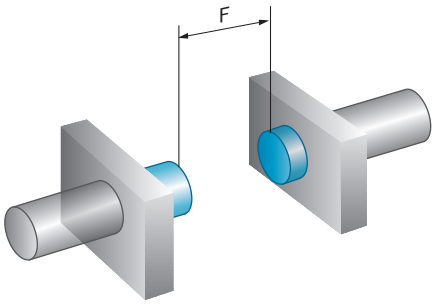


## Connection type

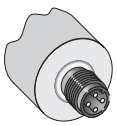

## Connection diagram

Cd-245

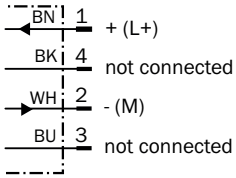


## Dimensional drawing (Dimensions in mm (inch))

IME18 Standard, connector, flush

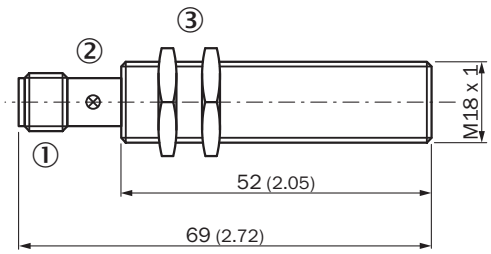


① Connection
② Display LED
③ Fastening nuts (2x); width across 24, metal

## Recommended accessories

Other models and accessories ➜ www.sick.com/IME

| | Brief description | Type | Part no. |
|---|---|---|---|
| Mounting brackets and plates | | | |
| | Mounting plate for M18 sensors, steel, zinc coated, without mounting hardware | BEF-WG-M18 | 5321870 |
| | Mounting bracket for M18 sensors, steel, zinc coated, without mounting hardware | BEF-WN-M18 | 5308446 |
| Terminal and alignment brackets | | | |
| | Clamping block for round sensors M18, without fixed stop, plastic (PA12), glass-fiber reinforced, mounting hardware included | BEF-KH-M18 | 2051481 |
| | Clamping block for round sensors M18, with fixed stop, plastic (PA12), glass-fiber reinforced, mounting hardware included | BEF-KHF-M18 | 2051482 |
| Others | | | |
| | • **Connection type head A:** Female connector, M12, 4-pin, straight, A-coded<br>• **Connection type head B:** Flying leads<br>• **Signal type:** Sensor/actuator cable<br>• **Cable:** 2 m, 4-wire, PVC<br>• **Description:** Sensor/actuator cable, unshielded<br>• **Application:** Zones with chemicals | YF2A14-020VB3XLEAX | 2096234 |

| | Brief description | Type | Part no. |
|---|---|---|---|
| | • **Connection type head A:** Female connector, M12, 4-pin, straight, A-coded<br>• **Connection type head B:** Flying leads<br>• **Signal type:** Sensor/actuator cable<br>• **Cable:** 5 m, 4-wire, PVC<br>• **Description:** Sensor/actuator cable, unshielded<br>• **Application:** Zones with chemicals | YF2A14-050VB3XLEAX | 2096235 |
| | • **Connection type head A:** Female connector, M12, 4-pin, angled, A-coded<br>• **Connection type head B:** Flying leads<br>• **Signal type:** Sensor/actuator cable<br>• **Cable:** 2 m, 4-wire, PVC<br>• **Description:** Sensor/actuator cable, unshielded<br>• **Application:** Zones with chemicals | YG2A14-020VB3XLEAX | 2095895 |
| | • **Connection type head A:** Female connector, M12, 4-pin, angled, A-coded<br>• **Connection type head B:** Flying leads<br>• **Signal type:** Sensor/actuator cable<br>• **Cable:** 5 m, 4-wire, PVC<br>• **Description:** Sensor/actuator cable, unshielded<br>• **Application:** Zones with chemicals | YG2A14-050VB3XLEAX | 2095897 |

# SICK AT A GLANCE

SICK is one of the leading manufacturers of intelligent sensors and sensor solutions for industrial applications. A unique range of products and services creates the perfect basis for controlling processes securely and efficiently, protecting individuals from accidents and preventing damage to the environment.

We have extensive experience in a wide range of industries and understand their processes and requirements. With intelligent sensors, we can deliver exactly what our customers need. In application centers in Europe, Asia and North America, system solutions are tested and optimized in accordance with customer specifications. All this makes us a reliable supplier and development partner.

Comprehensive services complete our offering: SICK LifeTime Services provide support throughout the machine life cycle and ensure safety and productivity.

**For us, that is "Sensor Intelligence."**

# WORLDWIDE PRESENCE:

Contacts and other locations –www.sick.com



SICK
Sensor Intelligence.