Product data sheet

MICS3-AAAZ90AZ1P01

microScan3

SAFETY LASER SCANNERS

SICK
Sensor Intelligence.

Illustration may differ

Ordering information

Integration in the control system	Sub product family	Protective field range	Number of fields	Number of monitoring cases	Connection type	Type	Part no.
Local inputs and outputs (I/O)	microScan3 Core I/O	9 m	8	2	M12	MICS3-AAAZ90AZ1P01	1089492

Other models and accessories ➜ www.sick.com/microScan3

Detailed technical data

Features

Sub product family	microScan3 Core I/O
Model	Sensor including system plug
Application	Indoor
Protective field range	9 m
Warning field range	64 m
Number of simultaneously monitored fields	≤ 4 [1) 2)]
Number of fields	8 [3)]
Number of monitoring cases	2
Scanning angle	275°
Resolution (can be configured)	30 mm 40 mm 50 mm 60 mm 70 mm 150 mm 200 mm
Angular resolution	0.1°
Response time	≥ 90 ms
Protective field supplement	100 mm

[1)] Protection, warning or contour detection fields.
[2)] Please note the number of available OSSD pairs.
[3)] Please note the number of available inputs and OSSD pairs.

Safety-related parameters

Type	Type 3 (IEC 61496)
Safety integrity level	SIL 2 (IEC 61508)

Category	Category 3 (EN ISO 13849)
Performance level	PL d (EN ISO 13849)
PFH_D (mean probability of a dangerous failure per hour)	8.0×10^{-8}
T_M (mission time)	20 years (EN ISO 13849)
Safe state in the event of a fault	At least one OSSD is in the OFF state.

Functions

Restart interlock	✓
External device monitoring (EDM)	✓
Multiple sampling	✓
Monitoring case switching	✓
Simultaneous monitoring	✓
Static protective field switching	✓
Safe contour detection	✓
Contour as a reference	✓
Integrated configuration memory	✓
Measured data output	None

Interfaces

Connection type	Male connector, M12, 8 pin, A-coded (common male connector for power supply and inputs and outputs)
Universal I/Os	3
Outputs	
OSSD pairs	1
Configuration method	PC with Safety Designer (Configuration and Diagnostic Software)
Configuration and diagnostics interface	USB 2.0, Mini-USB
Display elements	Graphic color display, LEDs

Electrical data

Protection class	III (EN 61140)
Supply voltage V_s	24 V DC (16.8 V DC ... 30 V DC)
Power consumption typical	7 W (without output load)

Mechanical data

Dimensions (W x H x D)	112 mm x 135.1 mm x 111.1 mm
Weight	1.15 kg
Housing material	Aluminum
Housing color	RAL 1021 (yellow), RAL 9005 (black)
Optics cover material	Polycarbonate
Optics cover surface finish	Outside with scratch-resistant coating

Ambient data

Enclosure rating	IP65 (IEC 60529)
Ambient light immunity	≤ 3,000 lx (IEC 61496-3)
Ambient operating temperature	–10 °C ... +50 °C

Storage temperature	–25 °C ... +70 °C
Vibration resistance	IEC 60068-2-6, IEC 60068-2-64, IEC 60721-3-5, IEC TR 60721-4-3, IEC 61496-1, IEC 61496-3
Class	5M1 (IEC 60721-3-5) 3M4 (IEC TR 60721-4-3)
Shock resistance	IEC 60068-2-27, IEC 60721-3-5, IEC TR 60721-4-3, IEC 61496-1, IEC 61496-3
Class	5M1 (IEC 60721-3-5) 3M4 (IEC TR 60721-4-3)
Continuous shock	100 m/s², 16 ms 150 m/s², 6 ms
EMC	IEC 61496-1, IEC 61000-6-2, IEC 61000-6-4

Other information

Type of light	Pulsed laser diode
Wave length	845 nm
Detectable remission factor	1.8% to several 1000%
Laser class	1M (21 CFR 1040.10 and 1040.11, IEC 60825-1)

Classifications

ECLASS 5.0	27272705
ECLASS 5.1.4	27272705
ECLASS 6.0	27272705
ECLASS 6.2	27272705
ECLASS 7.0	27272705
ECLASS 8.0	27272705
ECLASS 8.1	27272705
ECLASS 9.0	27272705
ECLASS 10.0	27272705
ECLASS 11.0	27272705
ECLASS 12.0	27272705
ETIM 5.0	EC002550
ETIM 6.0	EC002550
ETIM 7.0	EC002550
ETIM 8.0	EC002550
UNSPSC 16.0901	39121528

Dimensional drawing (Dimensions in mm (inch))

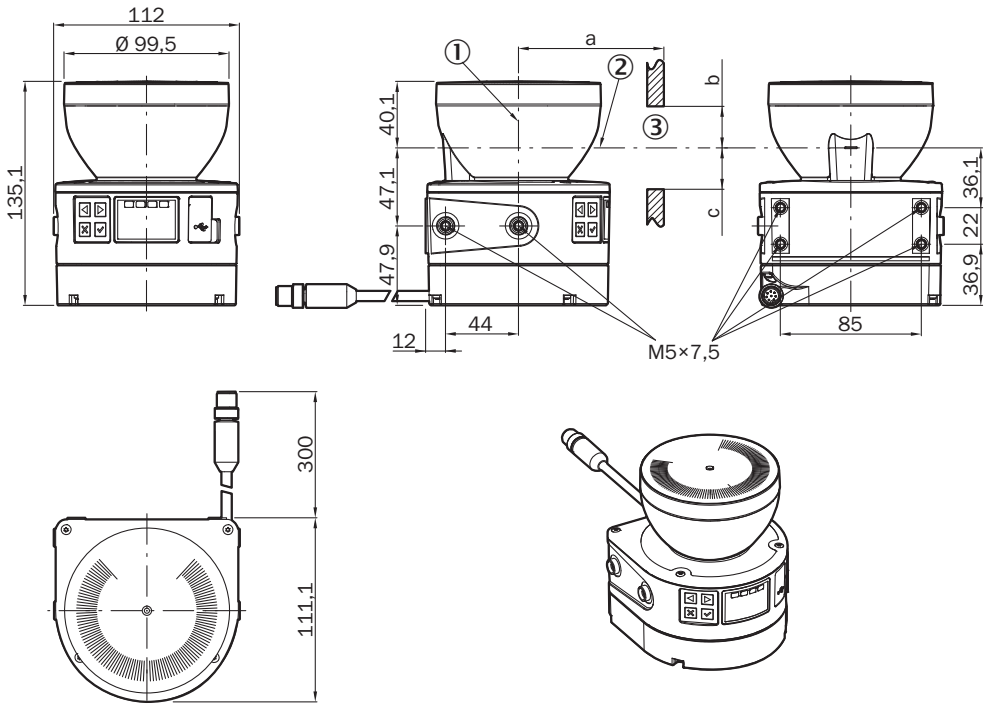

① Mirror axis of rotation
② Scan plane
③ Required viewing slit (a: length of the viewing slit, b: minimum height above the scan plane, c: minimum height below the scan plane. See the operating instructions for details.)

Pinouts

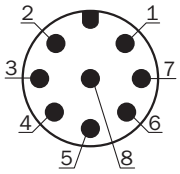

Pin	Designation	Description
1	+24 V DC	Supply voltage +24 V DC
2	OSSD 1.A	OSSD pair 1, OSSD A
3	0 V DC	Supply voltage 0 V DC
4	OSSD 1.B	OSSD pair 1, OSSD B
5	Uni-I/O 1	Universal I/O 1, configurable
6	Uni-I/O 2	Universal I/O 2, configurable
7	Uni-I/O 3	Universal I/O 3, configurable
8	FE	Functional earth/shielding
For details see operating instructions		

Connection diagram

microScan3 Core I/O with restart interlock and external device monitoring at RLY3-OSSD1 safety relay

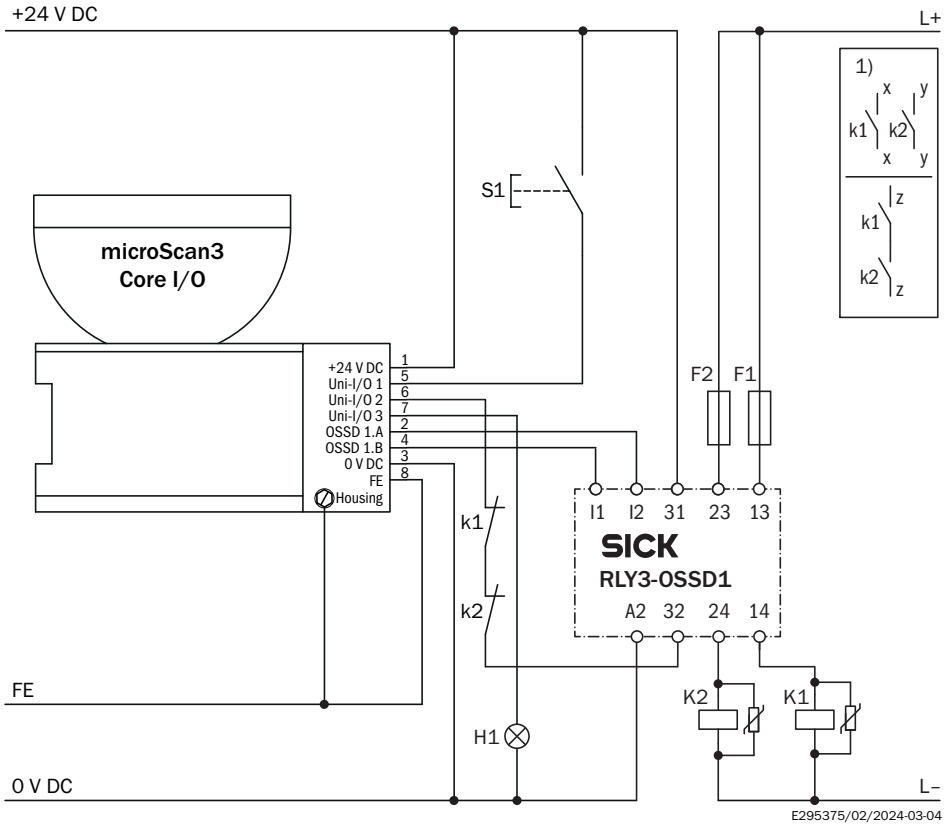

① Output circuits: These contacts must be incorporated into the control such that the dangerous state is brought to an end if the output circuit is open. For categories 4 and 3, they must be incorporated on dual-channels (x, y paths). Single-channel incorporation into the control (z path) is only possible with a single-channel control and taking the risk analysis into account.

Uni-I/O 1: configured as input reset

Uni-I/O 2: configured as input external device monitoring (EDM)

Uni-I/O 3: configured as output reset required

microScan3 Core I/O with restart interlock and external device monitoring

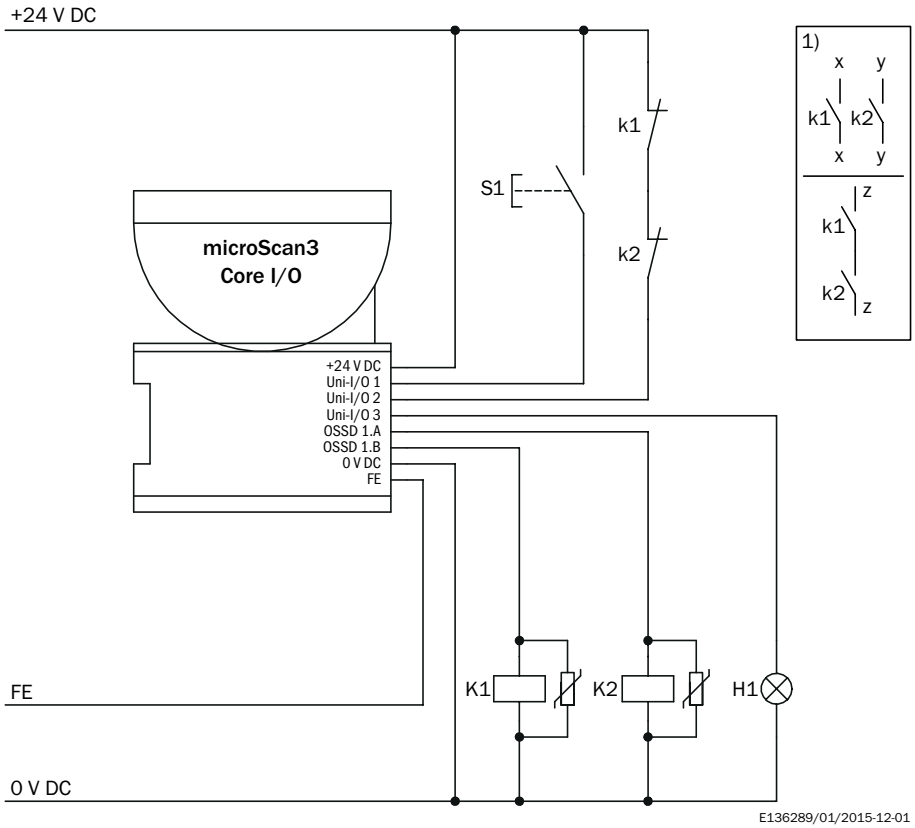

① Output circuits: These contacts must be incorporated into the control such that the dangerous state is brought to an end if the output circuit is open. For categories 4 and 3, they must be incorporated on dual-channels (x, y paths). Single-channel incorporation into the control (z path) is only possible with a single-channel control and taking the risk analysis into account.
Uni-I/O 1: configured as input reset
Uni-I/O 2: configured as input external device monitoring (EDM)
Uni-I/O 3: configured as output reset required

Recommended accessories

Other models and accessories ➜ www.sick.com/microScan3

	Brief description	Type	Part no.
Mounting brackets and plates			
	1 piece, mounting bracket with protection of optics hood, Stainless steel V2A (1.4301), powder-coated IGP-DURA face 5803A	1b mounting kit	2074242
	1 piece, mounting bracket, heavy-duty version, with protection cover, for floor mounting, height adjustment possible from 90 ... 310 mm, scanner tilt angle: ± 5°. Additional mounting brackets are not required.℄, steel, painted (RAL 1021)	Heavy-duty mounting kit for floor mounting	2102289
	1 piece, mounting bracket 150 mm for floor mounting of microScan3, stainless steel, Bracket and 4 x M5 screws for attaching the microScan3	Mounting bracket 150 mm for floor mounting of microScan3	2112950

	Brief description	Type	Part no.
	1 piece, mounting bracket 300 mm for floor mounting of microScan3, stainless steel, Bracket and 4 x M5 screws for attaching the microScan3	Mounting bracket 300 mm for floor mounting of microScan3	2112951
	1 piece, mounting bracket, Stainless steel V2A (1.4301), powder-coated IGP-DURA face 5803A	Mounting kit 1a	2073851
	1 piece, alignment bracket, alignment with cross-wise axis and depth axis possible, distance between mounting surface and device: 22.3 mm, only in conjunction with mounting kit 1a (2073851) or 1b (2074242), Stainless steel V2A (1.4301), powder-coated IGP-DURA face 5803A	Mounting kit 2a	2073852
Others			
	• **Connection type head A:** Female connector, M12, 8-pin, straight, A-coded • **Connection type head B:** Flying leads • **Signal type:** Sensor/actuator cable • **Cable:** 2 m, 8-wire, PUR, halogen-free • **Description:** Sensor/actuator cable, unshielded • **Connection systems:** Flying leads • **Application:** Zones with oils and lubricants, Drag chain operation	DOL-1208G02MD25KM1	2079314
	• **Connection type head A:** Female connector, M12, 8-pin, straight, A-coded • **Connection type head B:** Flying leads • **Signal type:** Sensor/actuator cable • **Cable:** 5 m, 8-wire, PUR, halogen-free • **Description:** Sensor/actuator cable, unshielded • **Connection systems:** Flying leads • **Application:** Zones with oils and lubricants, Drag chain operation	DOL-1208G05MD25KM1	2079315
	• **Connection type head A:** Female connector, M12, 8-pin, straight, A-coded • **Connection type head B:** Flying leads • **Signal type:** Sensor/actuator cable • **Cable:** 10 m, 8-wire, PUR, halogen-free • **Description:** Sensor/actuator cable, unshielded • **Connection systems:** Flying leads • **Application:** Zones with oils and lubricants, Drag chain operation	DOL-1208G10MD25KM1	2079316
	• **Connection type head A:** Male connector, USB-A, straight • **Connection type head B:** Male connector, Mini-USB, straight • **Signal type:** USB • **Cable:** 3 m, 4-wire • **Description:** USB, shielded • **Note:** For connecting the configuration connection to the USB interface on the PC	Connection cable (male connector-male connector)	6042517
	• **Connection type head A:** Female connector, M12, 8-pin, straight, A-coded • **Connection type head B:** Flying leads • **Signal type:** Sensor/actuator cable • **Cable:** 20 m, 8-wire, PUR, halogen-free • **Description:** Sensor/actuator cable, unshielded • **Connection systems:** Flying leads • **Application:** Zones with oils and lubricants, Drag chain operation	DOL-1208G20MD25KM1	2092105
	• **Connection type head A:** Female connector, M12, 8-pin, straight, A-coded • **Connection type head B:** Flying leads • **Signal type:** Sensor/actuator cable • **Cable:** 30 m, 8-wire, PUR, halogen-free • **Description:** Sensor/actuator cable, unshielded • **Connection systems:** Flying leads • **Application:** Zones with oils and lubricants, Drag chain operation	DOL-1208G30MD25KM1	2092106
	• **Connection type head A:** Male connector, USB-A, straight • **Connection type head B:** Male connector, Mini-USB, straight • **Signal type:** USB • **Cable:** 5 m, 4-wire • **Description:** USB, shielded • **Note:** For connecting the configuration connection to the USB interface on the PC	Connection cable (male connector-male connector)	6053566

SICK AT A GLANCE

SICK is one of the leading manufacturers of intelligent sensors and sensor solutions for industrial applications. A unique range of products and services creates the perfect basis for controlling processes securely and efficiently, protecting individuals from accidents and preventing damage to the environment.

We have extensive experience in a wide range of industries and understand their processes and requirements. With intelligent sensors, we can deliver exactly what our customers need. In application centers in Europe, Asia and North America, system solutions are tested and optimized in accordance with customer specifications. All this makes us a reliable supplier and development partner.

Comprehensive services complete our offering: SICK LifeTime Services provide support throughout the machine life cycle and ensure safety and productivity.

For us, that is "Sensor Intelligence."

WORLDWIDE PRESENCE:

Contacts and other locations –www.sick.com

SICK
Sensor Intelligence.