Product data sheet

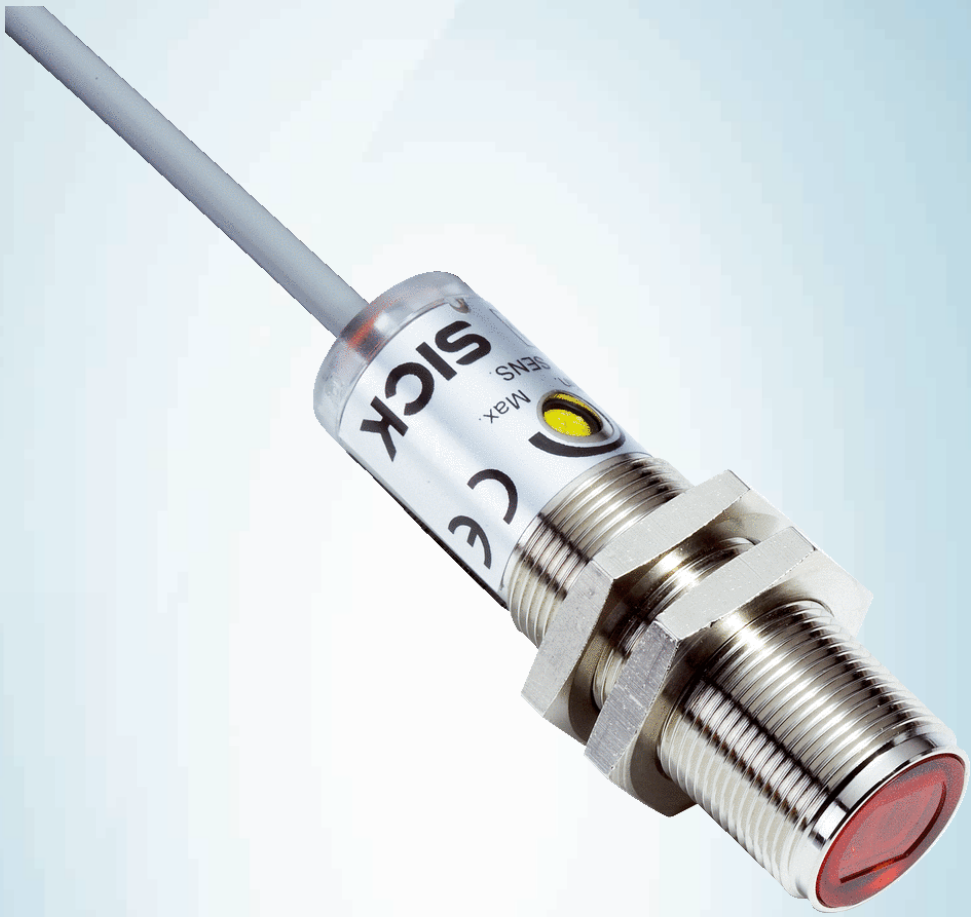

VTF180-2P41112

V180-2

CYLINDRICAL PHOTOELECTRIC SENSORS

SICK
Sensor Intelligence.

Illustration may differ

Ordering information

Type	Part no.
VTF180-2P41112	6041802

Other models and accessories ➜ www.sick.com/V180-2

Detailed technical data

Features

Functional principle	Photoelectric proximity sensor
Functional principle detail	Background blanking
Dimensions (W x H x D)	18 mm x 18 mm x 62.5 mm
Housing design (light emission)	Cylindrical
Housing length	62.5 mm
Thread diameter (housing)	M18 x 1
Optical axis	Axial
Sensing range max.	1 mm ... 140 mm [1]
Sensing range	1 mm ... 100 mm [1]
Type of light	Visible red light
Light source	LED [2]
Light spot size (distance)	Ø 8 mm (100 mm)
Wave length	645 nm
Adjustment	Potentiometer, 270° (Sensing range)
Special feature	Focused optics

[1] Object with 90% remission (based on standard white, DIN 5033).
[2] Average service life: 100,000 h at T_U = +25 °C.

Mechanics/electronics

Supply voltage	10 V DC ... 30 V DC [1]

[1] Limit values when operated in short-circuit protected network: max. 8 A.
[2] May not exceed or fall below U_V tolerances.
[3] Without load.
[4] Control wire open: dark switching D.ON.
[5] Signal transit time with resistive load.
[6] With light/dark ratio 1:1.
[7] Do not bend below 0 °C.
[8] A = V_S connections reverse-polarity protected.
[9] B = inputs and output reverse-polarity protected.
[10] D = outputs overcurrent and short-circuit protected.

Ripple	± 10 % [2]
Current consumption	30 mA [3]
Switching output	PNP [4]
Switching mode	Light/dark switching [4]
Switching mode selector	Selectable via L/D control cable
Signal voltage PNP HIGH/LOW	Approx. V_S – 1.8 V / 0 V
Output current $I_{max.}$	≤ 100 mA
Response time	≤ 0.5 ms [5]
Switching frequency	1,000 Hz [6]
Connection type	Cable, 4-wire, 2 m [7]
Cable material	PVC
Conductor cross section	0.18 mm²
Cable diameter	Ø 3.8 mm
Circuit protection	A [8] B [9] D [10]
Protection class	III
Weight	95 g
Housing material	Metal, Nickel-plated brass and PC
Optics material	Plastic, PMMA
Enclosure rating	IP67
Items supplied	Fastening nuts (2 x)
Special feature	Focused optics
Ambient operating temperature	–25 °C ... +55 °C
Ambient temperature, storage	–40 °C ... +70 °C

[1] Limit values when operated in short-circuit protected network: max. 8 A.
[2] May not exceed or fall below U_V tolerances.
[3] Without load.
[4] Control wire open: dark switching D.ON.
[5] Signal transit time with resistive load.
[6] With light/dark ratio 1:1.
[7] Do not bend below 0 °C.
[8] A = V_S connections reverse-polarity protected.
[9] B = inputs and output reverse-polarity protected.
[10] D = outputs overcurrent and short-circuit protected.

Safety-related parameters

$MTTF_D$	1,884 years
DC_{avg}	0 %

Classifications

eCl@ss 5.0	27270904
eCl@ss 5.1.4	27270904
eCl@ss 6.0	27270904
eCl@ss 6.2	27270904

eCl@ss 7.0	27270904
eCl@ss 8.0	27270904
eCl@ss 8.1	27270904
eCl@ss 9.0	27270904
eCl@ss 10.0	27270904
eCl@ss 11.0	27270904
eCl@ss 12.0	27270903
ETIM 5.0	EC002719
ETIM 6.0	EC002719
ETIM 7.0	EC002719
ETIM 8.0	EC002719
UNSPSC 16.0901	39121528

Connection type

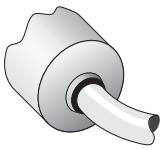

Connection diagram

Cd-089

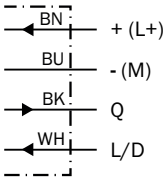

Characteristic curve

VTF180-2, 140 mm, axial

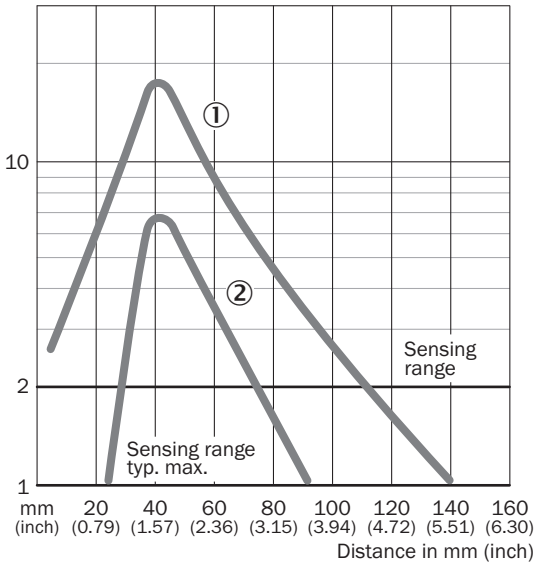

① Sensing range on white, 90% remission
② Sensing range on gray, 18 % remission

Light spot size

VTF180-2

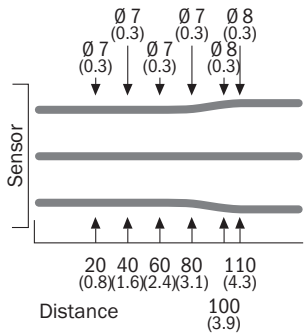

Sensing range diagram

VTF180-2, 140 mm, axial

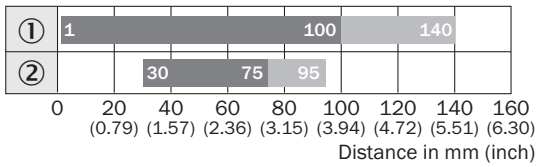

Sensing range Sensing range max.

① Sensing range on white, 90% remission
② Sensing range on gray, 18 % remission

Adjustments

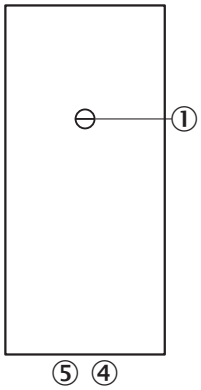

③ Sensitivity control 270°
④ LED indicator orange: switching output active
⑤ LED indicator green

Dimensional drawing (Dimensions in mm (inch))

VTF180-2, VTE180-2, VTB180-2, metal, axial

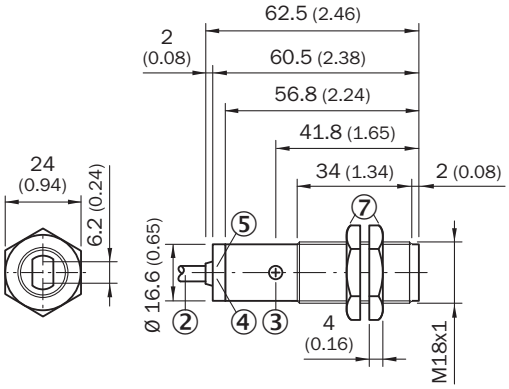

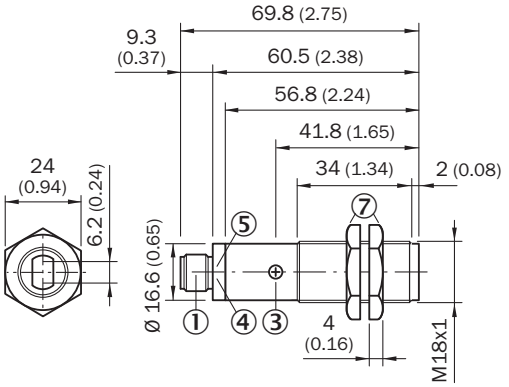

① M12 male device connector, 4-pin
② Connection cable 2 m
③ Sensitivity control 270°
④ LED indicator orange: switching output active
⑤ LED indicator green: strength indicator
⑦ Fastening nuts (2x); width across 24, metal

Recommended accessories

Other models and accessories ➜ www.sick.com/V180-2

	Brief description	Type	Part no.
Plug connectors and cables			
	Head A: male connector, M12, 4-pin, straight Cable: unshielded	STE-1204-G	6009932

SICK AT A GLANCE

SICK is one of the leading manufacturers of intelligent sensors and sensor solutions for industrial applications. A unique range of products and services creates the perfect basis for controlling processes securely and efficiently, protecting individuals from accidents and preventing damage to the environment.

We have extensive experience in a wide range of industries and understand their processes and requirements. With intelligent sensors, we can deliver exactly what our customers need. In application centers in Europe, Asia and North America, system solutions are tested and optimized in accordance with customer specifications. All this makes us a reliable supplier and development partner.

Comprehensive services complete our offering: SICK LifeTime Services provide support throughout the machine life cycle and ensure safety and productivity.

For us, that is "Sensor Intelligence."

WORLDWIDE PRESENCE:

Contacts and other locations –www.sick.com

SICK
Sensor Intelligence.