Product data sheet

ZLD18-4FZ4A8

Z18 Simple Sense

HYBRID PHOTOELECTRIC SENSORS

SICK
Sensor Intelligence.

Illustration may differ

Ordering information

Type	Part no.
ZLD18-4FZ4A8	1099298

Other models and accessories ➜ www.sick.com/Z18_Simple_Sense

Detailed technical data

Features

Functional principle	Photoelectric retro-reflective sensor
Functional principle detail	Dual lens
Dimensions (W x H x D)	13.6 mm x 44.2 mm x 33.3 mm
Housing design (light emission)	Hybrid
Thread diameter (housing)	M18
Mounting system type	M18, head/M18, base
Housing color	Blue
Sensing range max.	0 m ... 5 m [1]
Sensing range	0 m ... 4.2 m [1]
Type of light	Visible red light
Light source	LED
Light spot size (distance)	Ø 125 mm (1,000 mm)
Wave length	625 nm

[1] Reflector PL80A.

Mechanics/electronics

Supply voltage U_B	10 V DC ... 30 V DC
Ripple	< 10 %
Current consumption	≤ 15 mA [1]
Switching output	PNP
Switching mode	Dark switching

[1] Without load.
[2] Signal transit time with resistive load.
[3] With light/dark ratio 1:1.
[4] A = V_S connections reverse-polarity protected.
[5] B = inputs and output reverse-polarity protected.
[6] D = outputs overcurrent and short-circuit protected.

Switching output detail	
Switching output Q1	PNP, Dark switching
Switching output Q2	Not connected
Output current $I_{max.}$	100 mA
Response time	≤ 500 µs [2]
Switching frequency	1,000 kHz [3]
Connection type	Male connector M12, 4-pin
Circuit protection	A [4] B [5] D [6]
Protection class	III
Weight	4.54 g
Polarisation filter	✓
Special device	✓
Housing material	Plastic, ABS
Optics material	Plastic, PMMA
Enclosure rating	IP67
Ambient operating temperature	–40 °C ... +55 °C
Ambient temperature, storage	–40 °C ... +70 °C
UL File No.	E189383

[1] Without load.
[2] Signal transit time with resistive load.
[3] With light/dark ratio 1:1.
[4] A = V_S connections reverse-polarity protected.
[5] B = inputs and output reverse-polarity protected.
[6] D = outputs overcurrent and short-circuit protected.

Classifications

ECLASS 5.0	27270902
ECLASS 5.1.4	27270902
ECLASS 6.0	27270902
ECLASS 6.2	27270902
ECLASS 7.0	27270902
ECLASS 8.0	27270902
ECLASS 8.1	27270902
ECLASS 9.0	27270902
ECLASS 10.0	27270902
ECLASS 11.0	27270902
ECLASS 12.0	27270902
ETIM 5.0	EC002717
ETIM 6.0	EC002717
ETIM 7.0	EC002717
ETIM 8.0	EC002717

UNSPSC 16.0901	39121528

Connection type/pinouts

Connection type	Male connector M12, 4-pin
Pinouts	
BN 1	+ (L+)
WH 2	Not connected
BU 3	- (M)
BK 4	Q_1

Dimensional drawing (Dimensions in mm (inch))

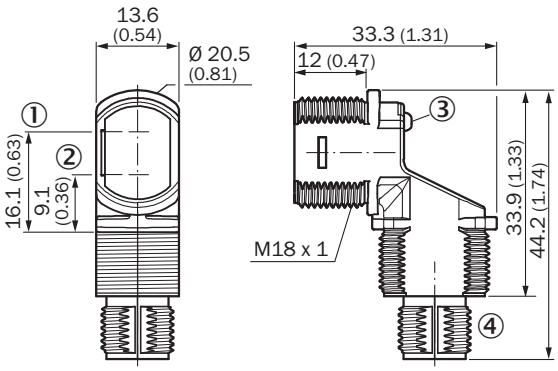

① Optical axis, sender
② Optical axis, receiver
③ LED status indicator
④ Connection

Connection type

Pinouts, see technical data: **Connection type/pinouts**

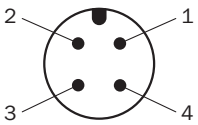

M12 male connector, 4-pin, A-coding

Characteristic curve

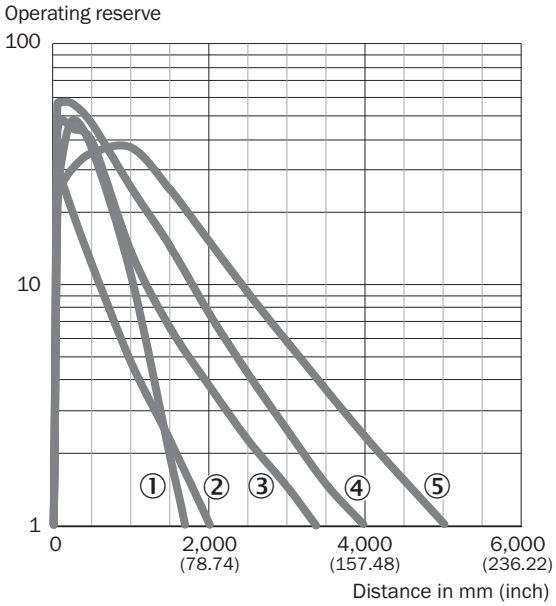

① Reflector PL23 FT
② Reflector PL20A
③ Reflector PL250
④ Reflector PL40A
⑤ Reflector PL80A

Sensing range diagram

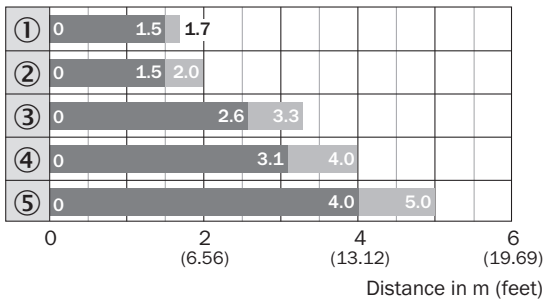

Sensing range Sensing range max.

① Reflector PL23 FT
② Reflector PL20A
③ Reflector PL250
④ Reflector PL40A
⑤ Reflector PL80A

Recommended accessories

Other models and accessories ➜ www.sick.com/Z18_Simple_Sense

	Brief description	Type	Part no.
Mounting brackets and plates			
	Universal mounting bracket for reflectors, steel, zinc coated	BEF-WN-REFX	2064574
Reflectors			
	Rectangular, screw connection, 51 mm x 61 mm, PMMA/ABS, Screw-on, 2 hole mounting	P250	5304812
Others			
	• **Connection type head A:** Female connector, M12, 4-pin, straight, A-coded • **Connection type head B:** Flying leads • **Signal type:** Sensor/actuator cable • **Cable:** 5 m, 4-wire, PVC • **Description:** Sensor/actuator cable, unshielded • **Application:** Zones with chemicals	YF2A14-050VB3XLEAX	2096235
	• **Connection type head A:** Male connector, M12, 4-pin, straight • **Description:** Unshielded • **Connection systems:** Screw-type terminals • **Permitted cross-section:** ≤ 0.75 mm²	STE-1204-G	6009932

SICK AT A GLANCE

SICK is one of the leading manufacturers of intelligent sensors and sensor solutions for industrial applications. A unique range of products and services creates the perfect basis for controlling processes securely and efficiently, protecting individuals from accidents and preventing damage to the environment.

We have extensive experience in a wide range of industries and understand their processes and requirements. With intelligent sensors, we can deliver exactly what our customers need. In application centers in Europe, Asia and North America, system solutions are tested and optimized in accordance with customer specifications. All this makes us a reliable supplier and development partner.

Comprehensive services complete our offering: SICK LifeTime Services provide support throughout the machine life cycle and ensure safety and productivity.

For us, that is "Sensor Intelligence."

WORLDWIDE PRESENCE:

Contacts and other locations –www.sick.com

SICK
Sensor Intelligence.