Product data sheet

HTB18-P4A2AB

H18 Sure Sense

HYBRID PHOTOELECTRIC SENSORS

SICK
Sensor Intelligence.

Illustration may differ

Ordering information

Type	Part no.
HTB18-P4A2AB	1070986

Other models and accessories ➜ www.sick.com/H18_Sure_Sense

Detailed technical data

Features

Functional principle	Photoelectric proximity sensor
Functional principle detail	Background suppression
Dimensions (W x H x D)	16.2 mm x 48.5 mm x 31.8 mm
Housing design (light emission)	Hybrid
Thread diameter (housing)	M18
Mounting system type	M18, head/side (24.1 ... 25.4 mm)
Housing color	Blue
Sensing range max.	5 mm ... 300 mm [1]
Sensing range	5 mm ... 150 mm [2]
Type of light	Visible red light
Light source	PinPoint LED [3]
Light spot size (distance)	7 mm (300 mm)
Wave length	631 nm
Adjustment	
Potentiometer, right	Sensing range
Potentiometer, left	None
Special features	-

[1] Object with 90% remission (based on standard white, DIN 5033).
[2] Object with 6 % reflectance (referred to standard black, DIN 5033).
[3] Average service life: 100,000 h at T_U = +25 °C.

Mechanics/electronics

Supply voltage	10 V DC ... 30 V DC
Ripple	< 5 V_{pp} [1]
Current consumption	≤ 20 mA [2]
Switching output	PNP
Output function	Complementary
Switching mode	Light/dark switching
Switching output detail	
Switching output Q1	PNP, Light switching
Switching output Q2	PNP, Dark switching
Output current $I_{max.}$	≤ 100 mA
Response time	≤ 0.5 ms [3]
Switching frequency	1,000 Hz [4]
Connection type	Male connector M12, 4-pin
Circuit protection	A [5] B [6] D [7]
Protection class	III
Weight	18 g
Housing material	Plastic, VISTAL®
Optics material	Plastic, PMMA
Enclosure rating	IP67 IP69K
Items supplied	Fastening nut (1x), M18, plastic, black, flat
Electromagnetic compatibility (EMC)	EN 60947-5-2 (The sensor complies with the Radio Safety Requirements (EMC) for the industrial sector (Radio Safety Class A). It may cause radio interference if used in a residential area.)
Ambient operating temperature	–40 °C ... +65 °C
Ambient temperature, storage	–40 °C ... +75 °C
UL File No.	E189383

[1] May not exceed or fall below U_V tolerances.
[2] Without signal strength light bar and load.
[3] Signal transit time with resistive load.
[4] With light/dark ratio 1:1.
[5] A = V_S connections reverse-polarity protected.
[6] B = inputs and output reverse-polarity protected.
[7] D = outputs overcurrent and short-circuit protected.

Safety-related parameters

$MTTF_D$	622.2 years
DC_{avg}	0 %

Classifications

ECLASS 5.0	27270904
ECLASS 5.1.4	27270904
ECLASS 6.0	27270904

ECLASS 6.2	27270904
ECLASS 7.0	27270904
ECLASS 8.0	27270904
ECLASS 8.1	27270904
ECLASS 9.0	27270904
ECLASS 10.0	27270904
ECLASS 11.0	27270904
ECLASS 12.0	27270904
ETIM 5.0	EC002719
ETIM 6.0	EC002719
ETIM 7.0	EC002719
ETIM 8.0	EC002719
UNSPSC 16.0901	39121528

Connection type/pinouts

Connection type	Male connector M12, 4-pin
Pinouts	
BN 1	+ (L+)
WH 2	Q_2
BU 3	- (M)
BK 4	Q_1

Dimensional drawing (Dimensions in mm (inch))

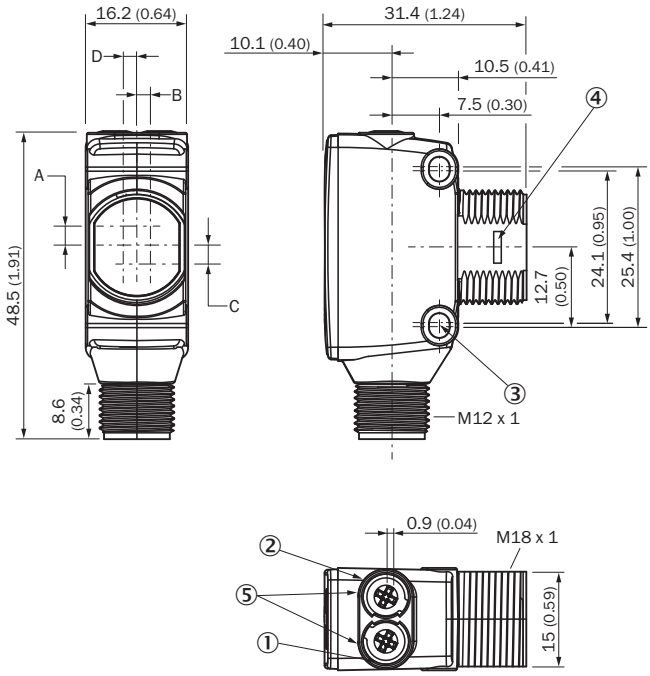

① LED indicator yellow: Status of received light beam
② LED indicator green: power on
③ M3 mounting hole
④ Snap Connection for flush ring (sold seperatly)
⑤ Potentiometer (if selected) or LED Indicators

Dimensions in mm (inch)	Receiver		Sender	
	A	**B**	**C**	**D**
HTB18 / HTF18	- 1.1 (0.04)	1.1 (0.04)	4.7 (0.19)	0.6 (0.02)
HTE18 / HL18 / HSE18	2.5 (0.1)	0.0 (0.0)	4.0 (0.16)	0.0 (0.0)
HTB18L / HTF18L / HL18L / HSE18L	2.5 (0.1)	0.0 (0.0)	3.5 (0.14)	0.0 (0.0)

Connection type

Pinouts, see Technical details: **Connection type/pinouts**

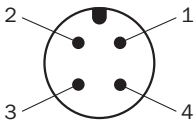

M12 male connector, 4-pin, A-coding

Characteristic curve

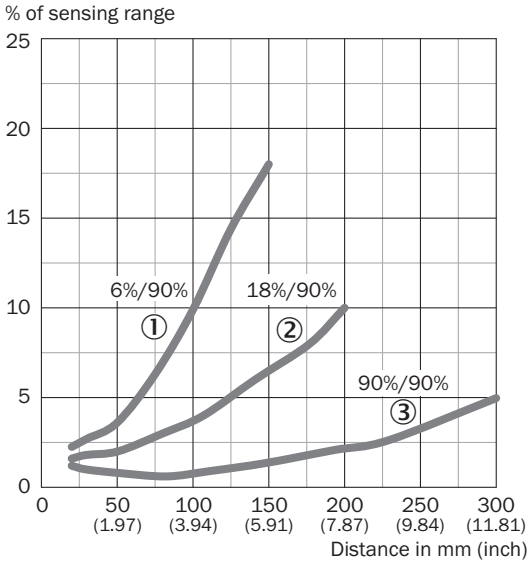

① Sensing range on black, 6% remission factor
② Sensing range on gray, 18% remission factor
③ Sensing range on white, 90% remission factor

Light spot size

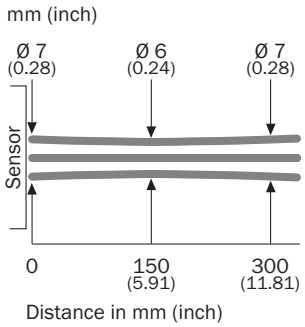

Sensing range diagram

Sensing range Sensing range max.

① Sensing range on black, 6% remission factor
② Sensing range on gray, 18% remission factor
③ Sensing range on white, 90% remission factor

Functions

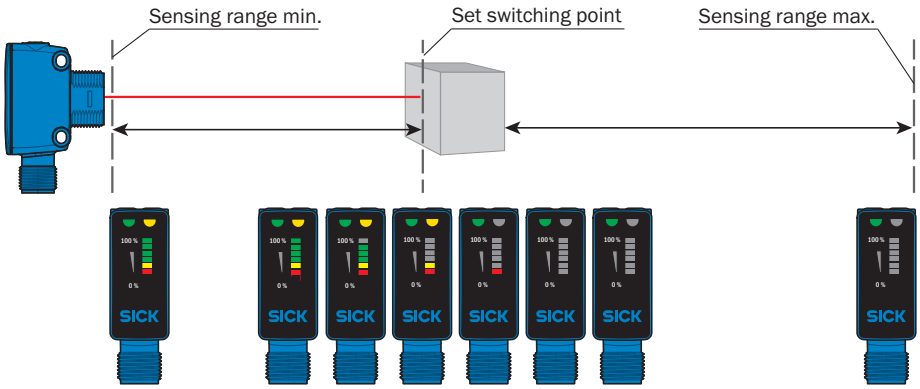

Recommended accessories

Other models and accessories ➜ www.sick.com/H18_Sure_Sense

	Brief description	Type	Part no.
Plug connectors and cables			
	• **Connection type head A:** Male connector, M12, 4-pin, straight • **Description:** Unshielded • **Connection systems:** Screw-type terminals • **Permitted cross-section:** ≤ 0.75 mm²	STE-1204-G	6009932
Others			
	• **Connection type head A:** Female connector, M12, 4-pin, straight, A-coded • **Connection type head B:** Flying leads • **Signal type:** Sensor/actuator cable • **Cable:** 5 m, 4-wire, PVC • **Description:** Sensor/actuator cable, unshielded • **Application:** Zones with chemicals	YF2A14-050VB3XLEAX	2096235

SICK AT A GLANCE

SICK is one of the leading manufacturers of intelligent sensors and sensor solutions for industrial applications. A unique range of products and services creates the perfect basis for controlling processes securely and efficiently, protecting individuals from accidents and preventing damage to the environment.

We have extensive experience in a wide range of industries and understand their processes and requirements. With intelligent sensors, we can deliver exactly what our customers need. In application centers in Europe, Asia and North America, system solutions are tested and optimized in accordance with customer specifications. All this makes us a reliable supplier and development partner.

Comprehensive services complete our offering: SICK LifeTime Services provide support throughout the machine life cycle and ensure safety and productivity.

For us, that is "Sensor Intelligence."

WORLDWIDE PRESENCE:

Contacts and other locations –www.sick.com

SICK
Sensor Intelligence.