Product data sheet

WL9-3P2230

W9

SMALL PHOTOELECTRIC SENSORS

SICK
Sensor Intelligence.

Illustration may differ

Ordering information

Type	Part no.
WL9-3P2230	1049059

Other models and accessories ➜ www.sick.com/W9

Detailed technical data

Features

Functional principle	Photoelectric retro-reflective sensor
Functional principle detail	Autocollimation
Dimensions (W x H x D)	12.2 mm x 49.8 mm x 23.6 mm
Housing design (light emission)	Rectangular
Mounting hole	M3
Sensing range max.	0 m ... 4 m [1]
Sensing range	0 m ... 2.5 m [1]
Type of light	Visible red light
Light source	PinPoint LED [2]
Light spot size (distance)	Ø 45 mm (1.5 m)
Wave length	650 nm
Adjustment	None

[1] Reflector PL80A.
[2] Average service life: 100,000 h at T_U = +25 °C.

Mechanics/electronics

Supply voltage U_B	10 V DC ... 30 V DC [1]
Ripple	< 5 V_{pp} [2]
Current consumption	30 mA [3]
Switching output	PNP [4]
Output function	Complementary
Switching mode	Light/dark switching [4]
Output current $I_{max.}$	≤ 100 mA [5]
Response time	< 0.5 ms [6]
Switching frequency	1,000 Hz [7]
Connection type	Male connector M8, 4-pin
Circuit protection	A [8] B [9] C [10]
Protection class	III
Weight	13 g
Polarisation filter	✓
Housing material	Plastic, VISTAL®
Optics material	Plastic, PMMA
Enclosure rating	IP66 IP67 IP69K
Ambient operating temperature	–40 °C ... +60 °C
Ambient temperature, storage	–40 °C ... +75 °C
UL File No.	NRKH.E181493

[1] Limit values when operated in short-circuit protected network: max. 8 A.
[2] May not exceed or fall below U_V tolerances.
[3] Without load.
[4] Q = light switching.
[5] At and above Tu 50 °C, a max. load current of Imax. = 50 mA is permitted.
[6] Signal transit time with resistive load.
[7] With light/dark ratio 1:1.
[8] A = V_S connections reverse-polarity protected.
[9] B = inputs and output reverse-polarity protected.
[10] C = interference suppression.

Safety-related parameters

$MTTF_D$	2,700 years
DC_{avg}	0 %
T_M (mission time)	20 years

Classifications

ECLASS 5.0	27270902
ECLASS 5.1.4	27270902
ECLASS 6.0	27270902

ECLASS 6.2	27270902
ECLASS 7.0	27270902
ECLASS 8.0	27270902
ECLASS 8.1	27270902
ECLASS 9.0	27270902
ECLASS 10.0	27270902
ECLASS 11.0	27270902
ECLASS 12.0	27270902
ETIM 5.0	EC002717
ETIM 6.0	EC002717
ETIM 7.0	EC002717
ETIM 8.0	EC002717
UNSPSC 16.0901	39121528

Adjustments

No adjustment possibility

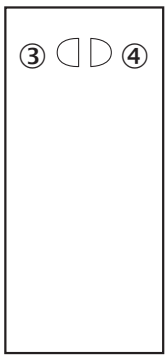

③ LED indicator yellow: Status of received light beam
④ LED indicator green: power on

Connection type

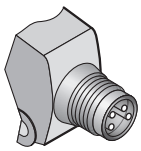

Connection diagram

Cd-084

Characteristic curve

WL9-3, red light, 4 m

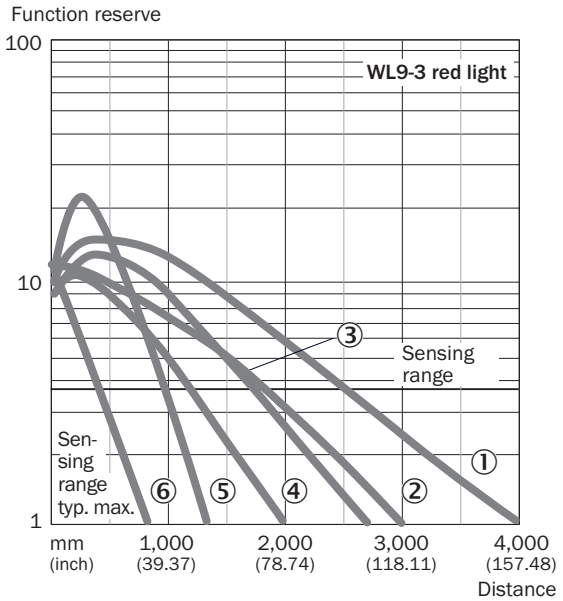

① Reflector PL80A
② Reflector P250
③ Reflector PL40A
④ Reflector PL20A
⑤ PL10F reflector
⑥ Reflective tape REF-IRF-56

Light spot size

WL9-3, red light, 4 m

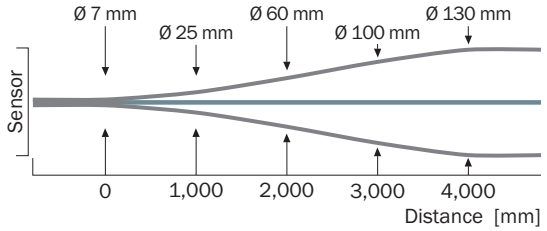

Sensing range diagram

WL9-3, red light, 4 m

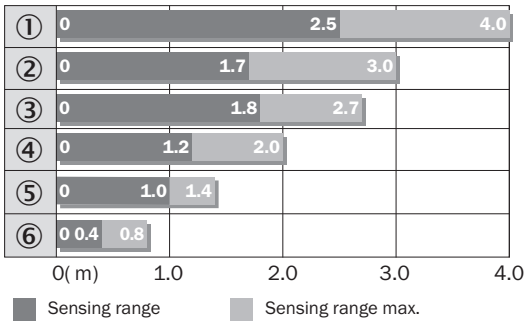

① Reflector PL80A
② Reflector P250
③ Reflector PL40A
④ Reflector PL20A
⑤ PL10F reflector
⑥ Reflective tape REF-IRF-56

Dimensional drawing (Dimensions in mm (inch))

WL9-3, WSE9-3

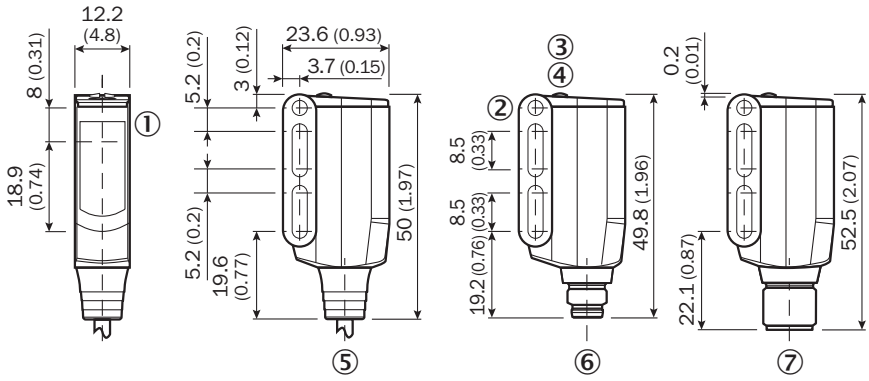

① Sender and receiver optical axis center
② Mounting hole M3 (Ø 3.1 mm)
③ LED indicator yellow: Status of received light beam
④ LED indicator green: power on
⑤ Connecting cable or connector
⑥ Male connector M8, 4-pin
⑦ Male connector M12, 4-pin

Recommended accessories

Other models and accessories ➜ www.sick.com/W9

	Brief description	Type	Part no.
Mounting brackets and plates			
	Mounting bracket, steel, zinc coated, mounting hardware included	BEF-WN-W9-2	2022855
Reflectors			
	Rectangular, screw connection, 40 mm x 60 mm, PMMA/ABS, Screw-on, 2 hole mounting	PL40A	1012720

SICK AT A GLANCE

SICK is one of the leading manufacturers of intelligent sensors and sensor solutions for industrial applications. A unique range of products and services creates the perfect basis for controlling processes securely and efficiently, protecting individuals from accidents and preventing damage to the environment.

We have extensive experience in a wide range of industries and understand their processes and requirements. With intelligent sensors, we can deliver exactly what our customers need. In application centers in Europe, Asia and North America, system solutions are tested and optimized in accordance with customer specifications. All this makes us a reliable supplier and development partner.

Comprehensive services complete our offering: SICK LifeTime Services provide support throughout the machine life cycle and ensure safety and productivity.

For us, that is "Sensor Intelligence."

WORLDWIDE PRESENCE:

Contacts and other locations –www.sick.com

SICK
Sensor Intelligence.