Product data sheet

IMS12-04BPSNU2S

IMS

INDUCTIVE PROXIMITY SENSORS

SICK
Sensor Intelligence.

Ordering information

Type	Part no.
IMS12-04BPSNU2S	1103181

Included in delivery: BEF-MU-M12 (1)

Other models and accessories → www.sick.com/IMS

Detailed technical data

Features

Housing	Metric
Housing	Standard design
Thread size	M12 x 1
Diameter	Ø 12 mm
Sensing range S_n	4 mm
Safe sensing range S_a	3.24 mm
Installation type	Flush
Switching frequency	2,000 Hz
Connection type	Cable, 3-wire, 2 m
Switching output	PNP
Output function	NO
Electrical wiring	DC 3-wire
Enclosure rating	IP68 [1)] IP69K [2)]
Special features	Resistant to cleaning agents, Temperature resistance
Special applications	Mobile machines, Hygienic and washdown zones, Difficult application conditions
Items supplied	Mounting nut, brass, nickel-plated (2x)

[1)] According to EN 60529.
[2)] According to ISO 20653:2013-03.

Mechanics/electronics

Supply voltage	7.2 V DC ... 60 V DC
Ripple	≤ 10 %

[1)] At I_a max.
[2)] Supply voltage U_B and constant ambient temperature Ta.
[3)] See “Continuous current I_a above temperature” characteristic curve.

Voltage drop	≤ 2.5 V [1]
Time delay before availability	100 ms
Hysteresis	3 % ... 20 %
Reproducibility	≤ 2 % [2]
Temperature drift (of S_r)	± 10 %
EMC	Emitted interference and interference immunity in accordance with Motor Insurance Directive ECE-R10 Rev. 5: E1-Type approval Interference immunity in accordance with DIN ISO 11452-2: 100 V/m AM vertical 20 MHz - 800 MHz; AM horizontal 200 MHz - 800 MHz; PM vertical/horizontal 800 MHz - 2.7 GHz Conducted disturbances in accordance with ISO 7637-2 (pulse/severity/failure criterion 12 V/ failure criterion 24 V): 1/IV/C/C, 2a/IV/A/A, 2b/IV/C/C, 3a/IV/A/A, 3b/IV/A/A, 4/IV/C/A, 5a/ IV/B/B, 5b/IV/B/B EN 61000-4-2 ESD: 4 kV CD / 8 kV AD EN 61000-4-3 HF radiated: 10 V/m EN 61000-4-4 burst: 2 kV EN 61000-4-5 surge: 0,5 kV L-to-L, Ri: 2 Ohm EN 61000-4-6 HF wire-bound: 10 V
Environmental test	Quick temperature change EN 60068-2-14, Na: TA = –25 °C, TB = 75 °C, t1 = 40 min, t2 = < 10 s, 300 cycles, Delta S_r ≤ 10%
Corrosion test	Salt spray test EN 60068-2-52: severity 5, 4 cycles
Continuous current I_a	≤ 200 mA [3]
No load current	≤ 10 mA
Cable material	PUR
Conductor size	0.5 mm²
Cable diameter	Ø 5 mm
Short-circuit protection	✓
Reverse polarity protection	✓
Power-up pulse protection	✓
Shock and vibration resistance	Vibration resistance EN 60068-2-6 Fc: 25 g peak (10 Hz ... 2,000 Hz) / –20 °C ... +50 °C Shock resistance EN 60068-2-27 Ea: 100 g 11 ms; 3 shocks in every direction of the 3 coordinate axes / –40 °C ... +85 °C Continuous shock resistance EN 60068-2-29 Eb: 40 g 3 ms rise, 7 ms fall / 5,000 shocks in every direction of the 3 coordinate axes / -20 °C ... +50 °C Broadband noise EN 60068-2-64: 15 g rms (5 Hz ... 2,000 Hz) / 8 hours in every direction of the 3 coordinate axes / –40 °C ... +85 °C
Ambient operating temperature	–40 °C ... +100 °C
Housing material	Stainless steel V4A, DIN 1.4404 / AISI 316L
Sensing face material	Plastic, LCP
Housing length	56 mm
Thread length	51 mm
Tightening torque, max.	Typ. 20 Nm
Protection class	III
UL File No.	E181493

[1] At I_a max.

[2] Supply voltage U_B and constant ambient temperature Ta.

[3] See “Continuous current I_a above temperature” characteristic curve.

Safety-related parameters

$MTTF_D$	1,196 years
DC_{avg}	0 %

Reduction factors

Note	The values are reference values which may vary
Stainless steel (V2A, 304)	Approx. 0.65
Aluminum (Al)	Approx. 0.35
Copper (Cu)	Approx. 0.24
Brass (Br)	Approx. 0.38

Installation note

Remark	Associated graphic see "Installation"
B	12 mm
C	12 mm
D	12 mm
F	32 mm

Classifications

ECLASS 5.0	27270101
ECLASS 5.1.4	27270101
ECLASS 6.0	27270101
ECLASS 6.2	27270101
ECLASS 7.0	27270101
ECLASS 8.0	27270101
ECLASS 8.1	27270101
ECLASS 9.0	27270101
ECLASS 10.0	27270101
ECLASS 11.0	27270101
ECLASS 12.0	27274001
ETIM 5.0	EC002714
ETIM 6.0	EC002714
ETIM 7.0	EC002714
ETIM 8.0	EC002714
UNSPSC 16.0901	39122230

Installation note

Flush installation

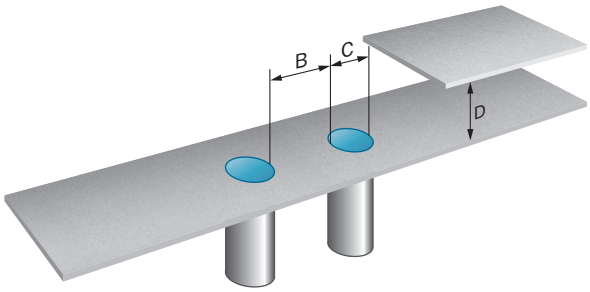

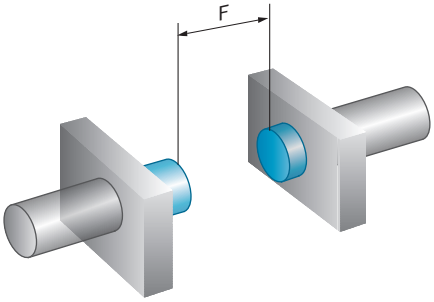

Connection diagram

Cd-001

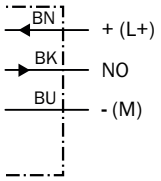

Temperature derating

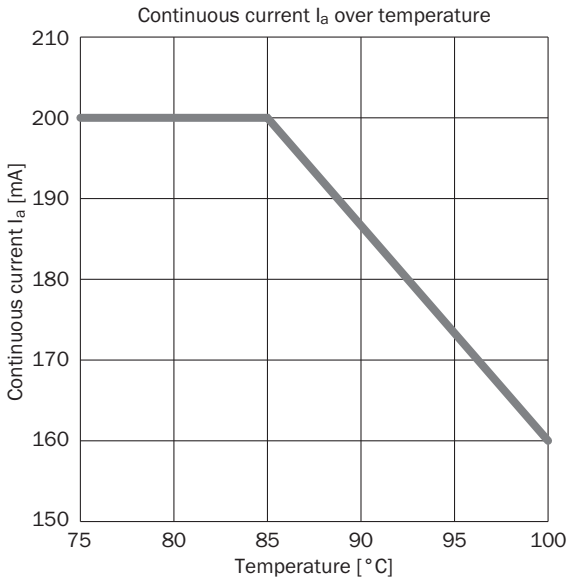

Response diagram

Response diagram

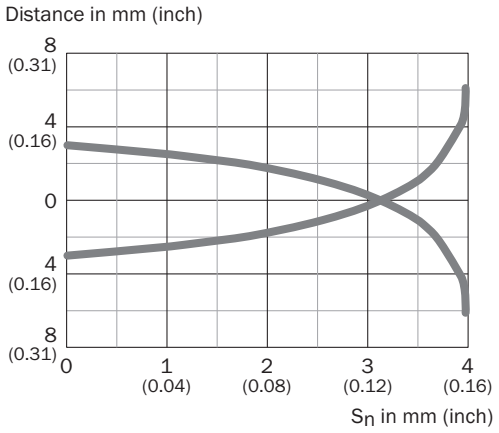

Dimensional drawing (Dimensions in mm (inch))

IMS12, V4A, flush

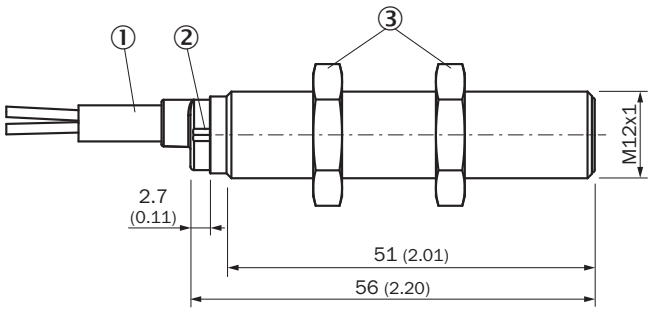

① Connection
② Display LED
③ Fastening nuts (2x); width across 17, brass nickel-plated

Recommended accessories

Other models and accessories ➜ www.sick.com/IMS

	Brief description	Type	Part no.
Universal bar clamp systems			
	Plate N06N for universal clamp bracket, M18, Stainless steel 1.4571 (sheet), Stainless steel 1.4408 (clamp), Universal clamp (5322627), mounting hardware	BEF-KHS-N06N	2051622

SICK AT A GLANCE

SICK is one of the leading manufacturers of intelligent sensors and sensor solutions for industrial applications. A unique range of products and services creates the perfect basis for controlling processes securely and efficiently, protecting individuals from accidents and preventing damage to the environment.

We have extensive experience in a wide range of industries and understand their processes and requirements. With intelligent sensors, we can deliver exactly what our customers need. In application centers in Europe, Asia and North America, system solutions are tested and optimized in accordance with customer specifications. All this makes us a reliable supplier and development partner.

Comprehensive services complete our offering: SICK LifeTime Services provide support throughout the machine life cycle and ensure safety and productivity.

For us, that is "Sensor Intelligence."

WORLDWIDE PRESENCE:

Contacts and other locations –www.sick.com

SICK
Sensor Intelligence.