Product data sheet

C2C-SA03030A10000

deTec

SAFETY LIGHT CURTAINS

SICK
Sensor Intelligence.

Illustration may differ

Ordering information

deTec2 Core

Resolution	Scanning range	Protective field height	System part	Type	Part no.
30 mm	15 m	300 mm	Sender	C2C-SA03030A10000	1213200

Other models and accessories → www.sick.com/deTec

Detailed technical data

Features

Sub product family	deTec2 Core
Application	Normal industrial environment
System part	Sender
Compatible receiver	1213184
Resolution	30 mm
Scanning range	15 m
Protective field height	300 mm
No blind zones	Yes
Synchronization	Optical synchronisation
Items supplied	Sender

Safety-related parameters

Type	Type 2 (IEC 61496-1)
Safety integrity level	SIL 1 (IEC 61508)
Category	Category 2 (ISO 13849-1)
Performance level	PL c (ISO 13849-1)
PFH_D (mean probability of a dangerous failure per hour)	31×10^{-9}
T_M (mission time)	20 years (ISO 13849-1)
Safe state in the event of a fault	At least one OSSD is in the OFF state.

Functions

Protective operation	✓
Automatic calibration of the protective field width	✓

Interfaces

System connection	Male connector M12, 5-pin

Length of cable	150 mm
Cable diameter	4.3 mm
Cable bend radius	
Stationary position	> 12 x cable diameter
Flexible use	> 15 x cable diameter
Display elements	LEDs

Electrical data

Protection class	III (IEC 61140)
Supply voltage V_S	24 V DC (19.2 V ... 28.8 V)
Ripple	≤ 10 %
Power consumption typical	0.82 W (DC)

Mechanical data

Dimensions	See dimensional drawing
Housing material	Aluminum extruded profile

Ambient data

Enclosure rating	IP65 (IEC 60529) IP67 (IEC 60529)
Ambient operating temperature	–30 °C ... +55 °C
Storage temperature	–30 °C ... +70 °C
Air humidity	15 % ... 95 %, Non-condensing
Vibration resistance	5 g, 10 Hz ... 55 Hz (IEC 60068-2-6)
Shock resistance	10 g, 16 ms (IEC 60068-2-27)

Other information

Wave length	850 nm
Type of light	Near-infrared (NIR), invisible

Classifications

ECLASS 5.0	27272704
ECLASS 5.1.4	27272704
ECLASS 6.0	27272704
ECLASS 6.2	27272704
ECLASS 7.0	27272704
ECLASS 8.0	27272704
ECLASS 8.1	27272704
ECLASS 9.0	27272704
ECLASS 10.0	27272704
ECLASS 11.0	27272704
ECLASS 12.0	27272704
ETIM 5.0	EC002549
ETIM 6.0	EC002549
ETIM 7.0	EC002549
ETIM 8.0	EC002549

UNSPSC 16.0901	46171620

Dimensional drawing (Dimensions in mm (inch))

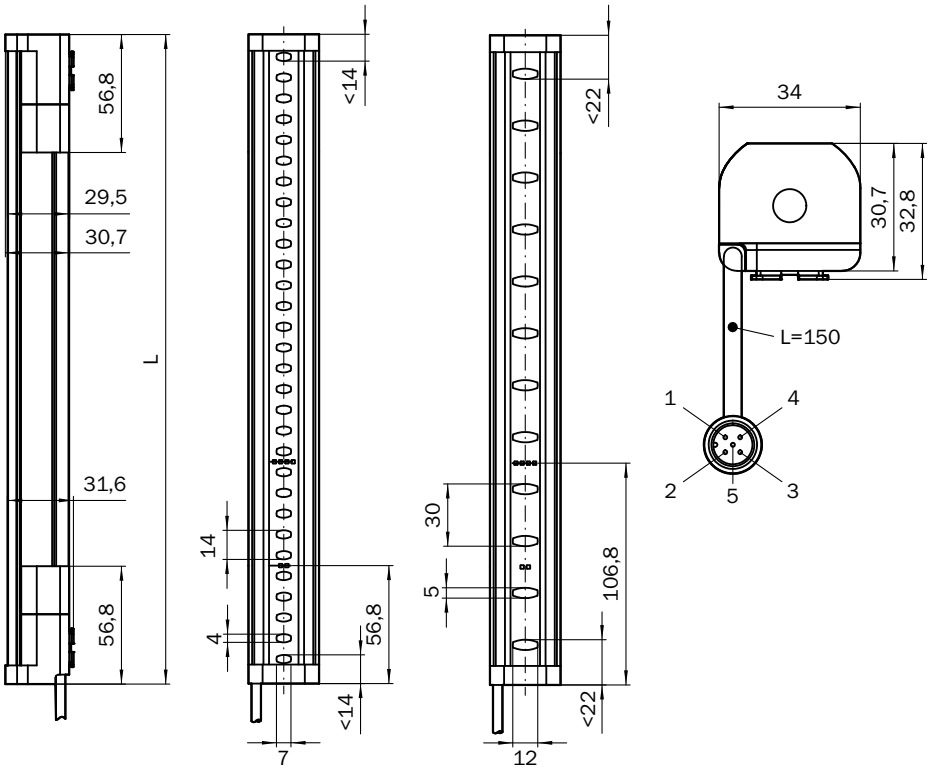

Protective field height	L
300 (11.81)	313 (12.32)
450 (17.72)	463 (18.23)
600 (23.62)	613 (24.13)
750 (29.53)	763 (30.04)
900 (35.43)	913 (35.94)
1,050 (41.34)	1,063 (41.85)
1,200 (47.24)	1,213 (47.76)
1,350 (53.15)	1,362 (53.62)
1,500 (59.06)	1,512 (59.53)
1,650 (64.96)	1,662 (65.43)
1,800 (70.87)	1,812 (71.34)
1,950 (76.77)	1,962 (77.24)
2,100 (82.68)	2,112 (83.15)

Connection diagram

deTec2 Core safety light curtain to RLY3-OSSD2 safety relay

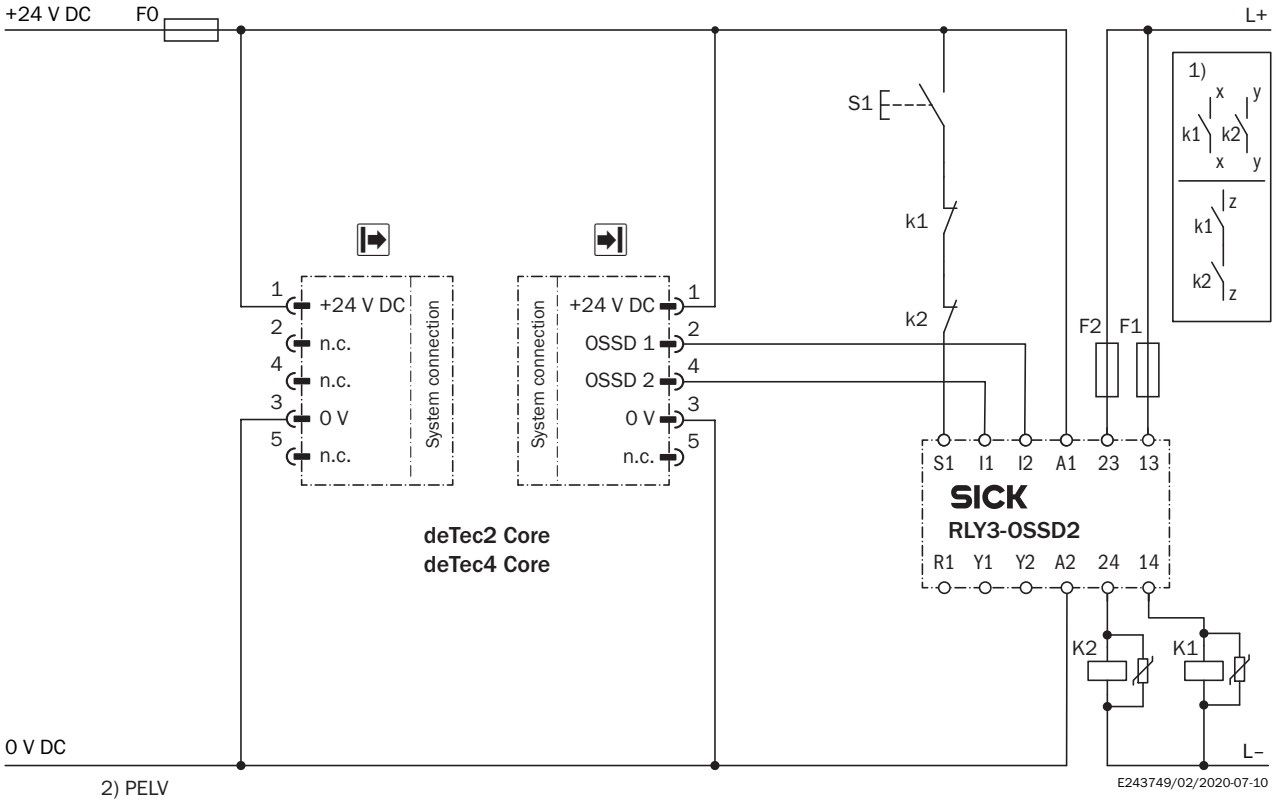

Task

Connection of a deTec2 Core safety light curtain to RLY3-OSSD2.

Operating mode: with restart interlock and external device monitoring.

Function

When the protective field is clear, the OSSD1 and OSSD2 outputs carry voltage. The system can be switched on when K1 and K2 are in a fault-free de-energized position. The RLY3-OSSD2 is switched on by pressing S1 (pushbutton is pressed and released). The outputs (contacts 13-14 and 23-24) switch the K1 and K2 contactors on. When the protective field is interrupted, the OSSD1 and OSSD2 outputs switch the RLY3-OSSD2 off. Contactors K1 and K2 are switched off.

Fault analysis

Cross-circuits and short-circuits of the OSSDs are recognized and lead to the locking status (lock-out). A malfunction with one of the K1 or K2 contactors is detected. The switch-off function is retained. In the event of manipulation (e.g., jamming) of the S1 pushbutton, the RLY3-OSSD2 will not re-enable the output current circuits.

Comments

[1] Output circuits: These contacts must be incorporated into the control such that the dangerous state is brought to an end if the output circuit is open. For categories 4 and 3, they must be incorporated on dual-channels (x, y paths). Type 2 devices are suitable for use up to PL c. Single-channel incorporation into the control (z path) is only possible with a singlechannel control and taking the risk analysis into account.

[2] SELV/PELV safety extra-low voltage.

Recommended accessories

Other models and accessories ➜ www.sick.com/deTec

	Brief description	Type	Part no.
Distributors			
	• **Connection type head A:** Female connector, M12, 5-pin, A-coded • **Connection type head B:** Male connector, M12, 5-pin, A-coded • **Connection type head C:** Female connector, M12, 5-pin, A-coded • **Description:** T-piece for simultaneous connection to sender and receiver, splits the cable from the control cabinet to the sender and receiver • **Note:** 5-pin	DSC-1205T000025KM0	6030664
Terminal and alignment brackets			
	4 pieces, FlexFix bracket for 2 devices (e.g. sender and receiver), can be aligned ± 15°, including M5 screw, plastic	BEF-1SHABPKU4	2066614
	4 pieces, QuickFix bracket for 2 devices (e.g. sender and receiver), plastic	BEF-3SHABPKU4	2098710
Others			
	• **Connection type head A:** Female connector, M12, 5-pin, straight, A-coded • **Connection type head B:** Male connector, M12, 5-pin, straight, A-coded • **Signal type:** Sensor/actuator cable • **Cable:** 2 m, 5-wire, PUR, halogen-free • **Description:** Sensor/actuator cable, unshielded • **Application:** Zones with oils and lubricants, Drag chain operation, Robot	YF2A15-020UB5M2A15	2096009
	• **Connection type head A:** Female connector, M12, 5-pin, straight, A-coded • **Connection type head B:** Flying leads • **Signal type:** Sensor/actuator cable • **Cable:** 2 m, 5-wire, PUR, halogen-free • **Description:** Sensor/actuator cable, unshielded • **Application:** Zones with oils and lubricants, Drag chain operation, Robot	YF2A15-020UB5XLEAX	2095617
	• **Connection type head A:** Female connector, M12, 5-pin, straight, A-coded • **Connection type head B:** Male connector, M12, 5-pin, straight, A-coded • **Signal type:** Sensor/actuator cable • **Cable:** 5 m, 5-wire, PUR, halogen-free • **Description:** Sensor/actuator cable, unshielded • **Application:** Zones with oils and lubricants, Drag chain operation, Robot	YF2A15-050UB5M2A15	2096010
	• **Connection type head A:** Female connector, M12, 5-pin, straight, A-coded • **Connection type head B:** Flying leads • **Signal type:** Sensor/actuator cable • **Cable:** 5 m, 5-wire, PUR, halogen-free • **Description:** Sensor/actuator cable, unshielded • **Application:** Zones with oils and lubricants, Drag chain operation, Robot	YF2A15-050UB5XLEAX	2095618
	• **Connection type head A:** Female connector, M12, 5-pin, straight, A-coded • **Connection type head B:** Male connector, M12, 5-pin, straight, A-coded • **Signal type:** Sensor/actuator cable • **Cable:** 10 m, 5-wire, PUR, halogen-free • **Description:** Sensor/actuator cable, unshielded • **Application:** Zones with oils and lubricants, Drag chain operation, Robot	YF2A15-100UB5M2A15	2096011
	• **Connection type head A:** Female connector, M12, 5-pin, straight, A-coded • **Connection type head B:** Flying leads • **Signal type:** Sensor/actuator cable • **Cable:** 10 m, 5-wire, PUR, halogen-free • **Description:** Sensor/actuator cable, unshielded • **Application:** Zones with oils and lubricants, Drag chain operation, Robot	YF2A15-100UB5XLEAX	2095619

	Brief description	Type	Part no.
Safety switching amplifier			
	• **Applications:** Evaluation unit • **Compatible sensor types:** Safety sensors with OSSDs • **Connection type:** Front connector with spring terminals • **Restart interlock:** yes • **External device monitoring (EDM):** Integrated • **Outputs:** 2 enabling current paths (safe), 2 application diagnostic outputs (not safe), 1 test pulse output (not safe) • **Housing width:** 18 mm	RLY3-OSSD200	1085344
	• **Applications:** Evaluation unit • **Compatible sensor types:** Safety sensors with OSSDs • **Connection type:** Front connector with spring terminals • **Restart interlock:** yes • **External device monitoring (EDM):** Integrated • **Outputs:** 3 enabling current paths (safe), 2 application diagnostic outputs (not safe), 1 test pulse output (not safe) • **Housing width:** 18 mm	RLY3-OSSD300	1099969

SICK AT A GLANCE

SICK is one of the leading manufacturers of intelligent sensors and sensor solutions for industrial applications. A unique range of products and services creates the perfect basis for controlling processes securely and efficiently, protecting individuals from accidents and preventing damage to the environment.

We have extensive experience in a wide range of industries and understand their processes and requirements. With intelligent sensors, we can deliver exactly what our customers need. In application centers in Europe, Asia and North America, system solutions are tested and optimized in accordance with customer specifications. All this makes us a reliable supplier and development partner.

Comprehensive services complete our offering: SICK LifeTime Services provide support throughout the machine life cycle and ensure safety and productivity.

For us, that is "Sensor Intelligence."

WORLDWIDE PRESENCE:

Contacts and other locations –www.sick.com

SICK
Sensor Intelligence.