Product data sheet

M2C-SA0250LA10

deTem

SAFETY MULTIBEAM SENSORS

SICK
Sensor Intelligence.

Illustration may differ

Ordering information

deTem2 Core

Scanning range	Number of beams	Beam separation	System part	Type	Part no.
17 m	2	500 mm	Sender	M2C-SA0250LA10	1085562

Other models and accessories → www.sick.com/deTem

Detailed technical data

Features

Application	Normal industrial environment
Functional principle	Sender/receiver
System part	Sender
Scanning range	17 m
Dimension of the light path	
Minimum	0.5 m ... 15 m
Typical	0.5 m ... 17 m
Number of beams	2
Beam separation	500 mm
Synchronization	Optical synchronisation
Items supplied	Sender

Safety-related parameters

Type	Type 2 (IEC 61496-1)
Safety integrity level	SIL 1 (IEC 61508)
Category	Category 2 (ISO 13849-1)
Performance level	PL c (ISO 13849-1)
PFH_D (mean probability of a dangerous failure per hour)	3×10^{-9}
T_M (mission time)	20 years (ISO 13849-1)
Safe state in the event of a fault	At least one OSSD is in the OFF state.

Interfaces

System connection	Male connector M12, 5-pin
Flexi Loop compatible M12 male connector	✓
Permitted cable length	50 m
Display elements	LEDs

Electrical data

Protection class	III (IEC 61140) [1]
Supply voltage V_S	24 V DC (19.2 V DC ... 28.8 V DC) [2]
Residual ripple	≤ 10 % [3]
Power consumption	≤ 50 mA
Power consumption	≤ 1.44 W (DC)

[1] SELV/PELV safety/protective extra-low voltage.
[2] The external voltage supply must be capable of buffering brief mains voltage failures of 20 ms as specified in EN 60204-1. Suitable power supplies are available as accessories from SICK.
[3] Within the limits of V_S.

Mechanical data

Dimensions	See dimensional drawing
Housing cross-section	31 mm x 34 mm
Material	
Housing	Aluminum extruded profile
Front screen	Polycarbonate, scratch-resistant coating
Weight	560 g (± 50 g)
Cable bend radius	
Stationary position	> 12 x cable diameter
Flexible use	> 15 x cable diameter

Ambient data

Enclosure rating	IP65 (IEC 60529) IP67 (IEC 60529)
Ambient operating temperature	–30 °C ... +55 °C
Storage temperature	–30 °C ... +70 °C
Air humidity	15 % ... 95 %, Non-condensing
Vibration resistance	5 g, 10 Hz ... 55 Hz (IEC 60068-2-6)
Shock resistance	10 g, 16 ms (IEC 60068-2-27)

Other information

Type of light	Near-infrared (NIR), invisible

Classifications

eCl@ss 5.0	27272703
eCl@ss 5.1.4	27272703
eCl@ss 6.0	27272703
eCl@ss 6.2	27272703
eCl@ss 7.0	27272703
eCl@ss 8.0	27272703
eCl@ss 8.1	27272703
eCl@ss 9.0	27272703
eCl@ss 10.0	27272703
eCl@ss 11.0	27272703
eCl@ss 12.0	27272703

ETIM 5.0	EC001832
ETIM 6.0	EC001832
ETIM 7.0	EC001832
ETIM 8.0	EC001832
UNSPSC 16.0901	46171620

Dimensional drawing (Dimensions in mm (inch))

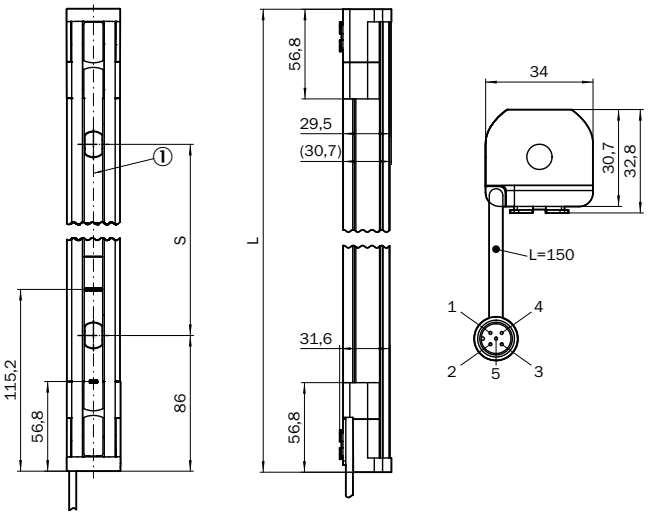

① Optical axis

Number of beams	Beam separation S	Length L
2	500 (19.69)	672 (26.46)
3	400 (15.75)	972 (38.27)
4	300 (11.81)	1,072 (42.2)

Recommended accessories

Other models and accessories ➜ www.sick.com/deTem

	Brief description	Type	Part no.
Plug connectors and cables			
	Head A: female connector, M12, 5-pin, straight, A-coded Head B: Flying leads Cable: Sensor/actuator cable, PUR, halogen-free, unshielded, 2 m	YF2A15-020UB5XLEAX	2095617
	Head A: female connector, M12, 5-pin, straight, A-coded Head B: Flying leads Cable: Sensor/actuator cable, PUR, halogen-free, unshielded, 5 m	YF2A15-050UB5XLEAX	2095618
	Head A: female connector, M12, 5-pin, straight, A-coded Head B: Flying leads Cable: Sensor/actuator cable, PUR, halogen-free, unshielded, 10 m	YF2A15-100UB5XLEAX	2095619

	Brief description	Type	Part no.
	Head A: female connector, M12, 5-pin, straight, A-coded Head B: male connector, M12, 5-pin, straight, A-coded Cable: Sensor/actuator cable, PUR, halogen-free, unshielded, 2 m	YF2A15-020UB5M2A15	2096009
	Head A: female connector, M12, 5-pin, straight, A-coded Head B: male connector, M12, 5-pin, straight, A-coded Cable: Sensor/actuator cable, PUR, halogen-free, unshielded, 5 m	YF2A15-050UB5M2A15	2096010
	Head A: female connector, M12, 5-pin, straight, A-coded Head B: male connector, M12, 5-pin, straight, A-coded Cable: Sensor/actuator cable, PUR, halogen-free, unshielded, 10 m	YF2A15-100UB5M2A15	2096011
Terminal and alignment brackets			
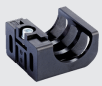	4 pieces, FlexFix bracket for 2 devices (e.g. sender and receiver), can be aligned ± 15°, including M5 screw, plastic	BEF-1SHABPKU4	2066614
	4 pieces, QuickFix bracket for 2 devices (e.g. sender and receiver), plastic	BEF-3SHABPKU4	2098710
Safety switching amplifier			
	• **Applications:** Evaluation unit • **Compatible sensor types:** Safety sensors with OSSDs • **Connection type:** Front connector with spring terminals • **Restart interlock:** yes • **External device monitoring (EDM):** Integrated • **Outputs:** 2 enabling current paths (safe), 2 application diagnostic outputs (not safe), 1 test pulse output (not safe) • **Housing width:** 18 mm	RLY3-OSSD200	1085344
	• **Applications:** Evaluation unit • **Compatible sensor types:** Safety sensors with OSSDs • **Connection type:** Front connector with spring terminals • **Restart interlock:** yes • **External device monitoring (EDM):** Integrated • **Outputs:** 3 enabling current paths (safe), 2 application diagnostic outputs (not safe), 1 test pulse output (not safe) • **Housing width:** 18 mm	RLY3-OSSD300	1099969

SICK AT A GLANCE

SICK is one of the leading manufacturers of intelligent sensors and sensor solutions for industrial applications. A unique range of products and services creates the perfect basis for controlling processes securely and efficiently, protecting individuals from accidents and preventing damage to the environment.

We have extensive experience in a wide range of industries and understand their processes and requirements. With intelligent sensors, we can deliver exactly what our customers need. In application centers in Europe, Asia and North America, system solutions are tested and optimized in accordance with customer specifications. All this makes us a reliable supplier and development partner.

Comprehensive services complete our offering: SICK LifeTime Services provide support throughout the machine life cycle and ensure safety and productivity.

For us, that is "Sensor Intelligence."

WORLDWIDE PRESENCE:

Contacts and other locations –www.sick.com

SICK
Sensor Intelligence.