Product data sheet

L40S-11MA1A

L4000 Systems

SAFETY SINGLE-BEAM SENSORS

SICK
Sensor Intelligence.

Ordering information

Scanning range	Model	Housing material	System part	Type	Part no.
7 m	M18 radial	Nickel-plated brass	Sender	L40S-11MA1A	6027341

Other models and accessories ➜ www.sick.com/L4000_Systems

Detailed technical data

Features

Light source	LED
Type of light	Visible red light
Scanning range	7 m
Number of beams	1
Detection capability	30 mm
Optical axis	Radial
Response time	0.4 ms
Response time	0.4 ms + Test device response time (UE401)

Safety-related parameters

Type	Type 4 (IEC 61496-1) [1]
Safety integrity level	SIL 3 (IEC 61508) [1]
Category	Category 4 (EN ISO 13849) [1]
Performance level	PL e (EN ISO 13849) [1]
PFH_D (mean probability of a dangerous failure per hour)	2.9×10^{-10} (EN ISO 13849) [1]
T_M (mission time)	20 years (EN ISO 13849) [1]

[1] Only in conjunction with UE401.

Interfaces

Connection type	Male connector M12, 4-pin, straight
Display elements	LED

Electrical data

Protection class	III (IEC 61140)
Supply voltage V_S	24 V DC (19.2 V DC ... 28.8 V DC)
Power consumption	≤ 60 mA

Mechanical data

Design	Cylindrical
Dimensions (diameter x length)	M18 x 107.7 mm
Housing material	Nickel-plated brass
Lens material	Glass
Weight	67 g

Ambient data

Enclosure rating	IP67 (EN 60529)
Ambient operating temperature	–20 °C ... +55 °C
Storage temperature	–25 °C ... +75 °C
Air humidity	15 % ... 95 %, Non-condensing
Vibration resistance	5 g, 10 Hz ... 55 Hz (IEC 60068-2-6)
Shock resistance	10 g, 16 ms (IEC 60068-2-29)

Other information

Light source	LED
Type of light	Visible red light
Wave length	660 nm
Aperture angle/receiving angle	± 2.5° / ± 2.5°

Classifications

ECLASS 5.0	27272701
ECLASS 5.1.4	27272701
ECLASS 6.0	27272701
ECLASS 6.2	27272701
ECLASS 7.0	27272701
ECLASS 8.0	27272701
ECLASS 8.1	27272701
ECLASS 9.0	27272701
ECLASS 10.0	27272701
ECLASS 11.0	27272701
ECLASS 12.0	27272701
ETIM 5.0	EC001831
ETIM 6.0	EC001831
ETIM 7.0	EC001831
ETIM 8.0	EC001831
UNSPSC 16.0901	46171620

Dimensional drawing (Dimensions in mm (inch))

M18, radial, straight

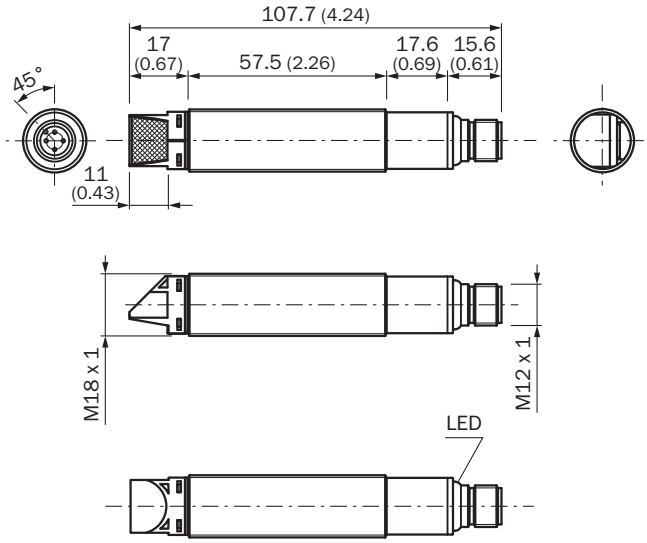

Recommended accessories

Other models and accessories ➜ www.sick.com/L4000_Systems

	Brief description	Type	Part no.
Deflector mirrors			
	Horizontal deflection, 75 mm x 80 mm reflector surface, Glass, Incl. mounting kit (2 x swivel mount)	PNS75-008	1026647
	Horizontal deflection, 96 mm x 124 mm reflector surface, Glass	PSK1	1005229
	Deflector mirror for 90° deflection, mirror surface 97 mm x 80 mm, not suitable for column mounting, Glass, mounting hardware included	PSK45	5306053
Mounting brackets and plates			
	Mounting bracket for M18 sensors, steel, zinc coated, without mounting hardware	BEF-WN-M18	5308446
Plug connectors and cables			
	• **Connection type head A:** Female connector, M12, 4-pin, straight, A-coded • **Connection type head B:** Flying leads • **Signal type:** Sensor/actuator cable • **Cable:** 5 m, 4-wire, PVC • **Description:** Sensor/actuator cable, unshielded • **Application:** Zones with chemicals	YF2A14-050VB3XLEAX	2096235

	Brief description	Type	Part no.
	• **Connection type head A:** Female connector, M12, 4-pin, angled, A-coded • **Connection type head B:** Flying leads • **Signal type:** Sensor/actuator cable • **Cable:** 5 m, 4-wire, PVC • **Description:** Sensor/actuator cable, unshielded • **Application:** Zones with chemicals	YG2A14-050VB3XLEAX	2095897
	• **Connection type head A:** Female connector, M12, 4-pin, straight • **Description:** Unshielded, Head A: female connector, M12, 4-pin, straight, unshielded, for power supply, for cable diameter 4 mm ... 6 mm Head B: - • **Connection systems:** Screw-type terminals • **Permitted cross-section:** ≤ 0.75 mm²	DOS-1204-G	6007302
	• **Connection type head A:** Female connector, M12, 4-pin, angled • **Description:** Unshielded, Head A: female connector, M12, 4-pin, angled, unshielded, for power supply, for cable diameter 3 mm ... 6.5 mm Head B: - • **Connection systems:** Screw-type terminals • **Permitted cross-section:** ≤ 0.75 mm²	DOS-1204-W	6007303
Switching amplifiers			
	• **Applications:** Evaluation unit • **Compatible sensor types:** L4000 Systems single-beam photoelectric safety switches	UE401-A0010	6027343

SICK AT A GLANCE

SICK is one of the leading manufacturers of intelligent sensors and sensor solutions for industrial applications. A unique range of products and services creates the perfect basis for controlling processes securely and efficiently, protecting individuals from accidents and preventing damage to the environment.

We have extensive experience in a wide range of industries and understand their processes and requirements. With intelligent sensors, we can deliver exactly what our customers need. In application centers in Europe, Asia and North America, system solutions are tested and optimized in accordance with customer specifications. All this makes us a reliable supplier and development partner.

Comprehensive services complete our offering: SICK LifeTime Services provide support throughout the machine life cycle and ensure safety and productivity.

For us, that is "Sensor Intelligence."

WORLDWIDE PRESENCE:

Contacts and other locations –www.sick.com

SICK
Sensor Intelligence.