Product data sheet

# IMS30-15BPSNU2S

IMS

INDUCTIVE PROXIMITY SENSORS

SICK
Sensor Intelligence.

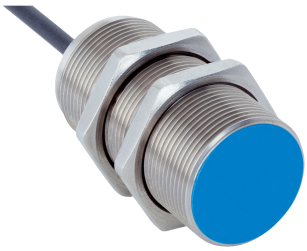

## Ordering information

| Type | Part no. |
|---|---|
| IMS30-15BPSNU2S | 1103197 |

**Included in delivery:** BEF-MU-M30 (1)

Other models and accessories → www.sick.com/IMS

## Detailed technical data

### Features

| | |
|---|---|
| **Housing** | Metric |
| **Housing** | Standard design |
| **Thread size** | M30 x 1.5 |
| **Diameter** | Ø 30 mm |
| **Sensing range $S_n$** | 15 mm |
| **Safe sensing range $S_a$** | 12.15 mm |
| **Installation type** | Flush |
| **Switching frequency** | 300 Hz |
| **Connection type** | Cable, 3-wire, 2 m |
| **Switching output** | PNP |
| **Output function** | NO |
| **Electrical wiring** | DC 3-wire |
| **Enclosure rating** | IP68 [1)]<br>IP69K [2)] |
| **Special features** | Resistant to cleaning agents, Temperature resistance |
| **Special applications** | Mobile machines, Hygienic and washdown zones, Difficult application conditions |
| **Items supplied** | Mounting nut, brass, nickel-plated (2x) |

[1)] According to EN 60529.
[2)] According to ISO 20653:2013-03.

### Mechanics/electronics

| | |
|---|---|
| **Supply voltage** | 7.2 V DC ... 60 V DC |
| **Ripple** | ≤ 10 % |

[1)] At $I_a$ max.
[2)] Supply voltage $U_B$ and constant ambient temperature Ta.
[3)] See “Continuous current $I_a$ above temperature” characteristic curve.

| | |
|---|---|
| **Voltage drop** | ≤ 2.5 V [1] |
| **Time delay before availability** | 100 ms |
| **Hysteresis** | 3 % ... 20 % |
| **Reproducibility** | ≤ 2 % [2] |
| **Temperature drift (of $S_r$)** | ± 10 % |
| **EMC** | Emitted interference and interference immunity in accordance with Motor Insurance Directive ECE-R10 Rev. 5: E1-Type approval<br>Interference immunity in accordance with DIN ISO 11452-2: 100 V/m<br>AM vertical 20 MHz - 800 MHz; AM horizontal 200 MHz - 800 MHz; PM vertical/horizontal 800 MHz - 2.7 GHz<br>Conducted disturbances in accordance with ISO 7637-2 (pulse/severity/failure criterion 12 V/ failure criterion 24 V): 1/IV/C/C, 2a/IV/A/A, 2b/IV/C/C, 3a/IV/A/A, 3b/IV/A/A, 4/IV/C/A, 5a/ IV/B/B, 5b/IV/B/B<br>EN 61000-4-2 ESD: 4 kV CD / 8 kV AD<br>EN 61000-4-3 HF radiated: 10 V/m<br>EN 61000-4-4 burst: 2 kV<br>EN 61000-4-5 surge: 0,5 kV L-to-L, Ri: 2 Ohm |
| **Environmental test** | Quick temperature change EN 60068-2-14, Na: TA = –25 °C, TB = 75 °C, t1 = 40 min, t2 = < 10 s, 300 cycles, Delta $S_r$ ≤ 10% |
| **Corrosion test** | Salt spray test EN 60068-2-52: severity 5, 4 cycles |
| **Continuous current $I_a$** | ≤ 200 mA [3] |
| **No load current** | ≤ 10 mA |
| **Cable material** | PUR |
| **Conductor size** | 0.5 mm² |
| **Cable diameter** | Ø 5 mm |
| **Short-circuit protection** | ✓ |
| **Reverse polarity protection** | ✓ |
| **Power-up pulse protection** | ✓ |
| **Shock and vibration resistance** | Vibration resistance EN 60068-2-6 Fc: 25 g peak (10 Hz ... 2,000 Hz) / –20 °C ... +50 °C<br>Shock resistance EN 60068-2-27 Ea: 100 g 11 ms; 3 shocks in every direction of the 3 coordinate axes / –40 °C ... +85 °C<br>Continuous shock resistance EN 60068-2-29 Eb: 40 g 3 ms rise, 7 ms fall / 5,000 shocks in every direction of the 3 coordinate axes / -20 °C ... +50 °C<br>Broadband noise EN 60068-2-64: 15 g rms (5 Hz ... 2,000 Hz) / 8 hours in every direction of the 3 coordinate axes / –40 °C ... +85 °C |
| **Ambient operating temperature** | –40 °C ... +100 °C |
| **Housing material** | Stainless steel V4A, DIN 1.4404 / AISI 316L |
| **Sensing face material** | Plastic, LCP |
| **Housing length** | 61 mm |
| **Thread length** | 55.65 mm |
| **Tightening torque, max.** | Typ. 100 Nm |
| **Protection class** | III |
| **UL File No.** | E181493 |

[1] At $I_a$ max.

[2] Supply voltage $U_B$ and constant ambient temperature Ta.

[3] See “Continuous current $I_a$ above temperature” characteristic curve.

## Safety-related parameters

| | |
|---|---|
| **$MTTF_D$** | 1,196 years |

| | |
|---|---|
| **$DC_{avg}$** | 0 % |

## Reduction factors

| | |
|---|---|
| **Note** | The values are reference values which may vary |
| **Stainless steel (V2A, 304)** | Approx. 0.62 |
| **Aluminum (Al)** | Approx. 0.26 |
| **Copper (Cu)** | Approx. 0.17 |
| **Brass (Br)** | Approx. 0.27 |

## Installation note

| | |
|---|---|
| **Remark** | Associated graphic see "Installation" |
| **B** | 40 mm |
| **C** | 30 mm |
| **D** | 45 mm |
| **F** | 120 mm |

## Classifications

| | |
|---|---|
| **ECLASS 5.0** | 27270101 |
| **ECLASS 5.1.4** | 27270101 |
| **ECLASS 6.0** | 27270101 |
| **ECLASS 6.2** | 27270101 |
| **ECLASS 7.0** | 27270101 |
| **ECLASS 8.0** | 27270101 |
| **ECLASS 8.1** | 27270101 |
| **ECLASS 9.0** | 27270101 |
| **ECLASS 10.0** | 27270101 |
| **ECLASS 11.0** | 27270101 |
| **ECLASS 12.0** | 27274001 |
| **ETIM 5.0** | EC002714 |
| **ETIM 6.0** | EC002714 |
| **ETIM 7.0** | EC002714 |
| **ETIM 8.0** | EC002714 |
| **UNSPSC 16.0901** | 39122230 |

## Installation note

Flush installation

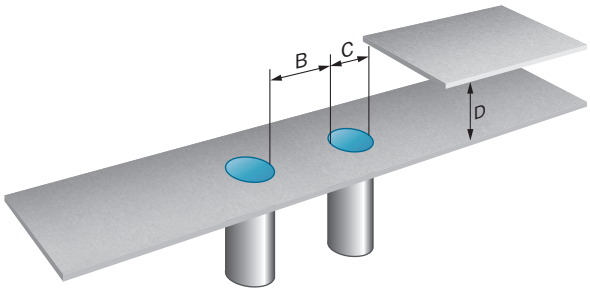


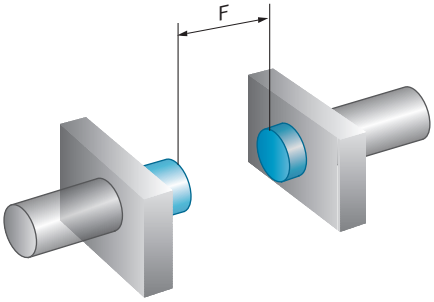


## Connection diagram

Cd-001

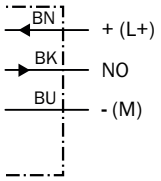


## Temperature derating

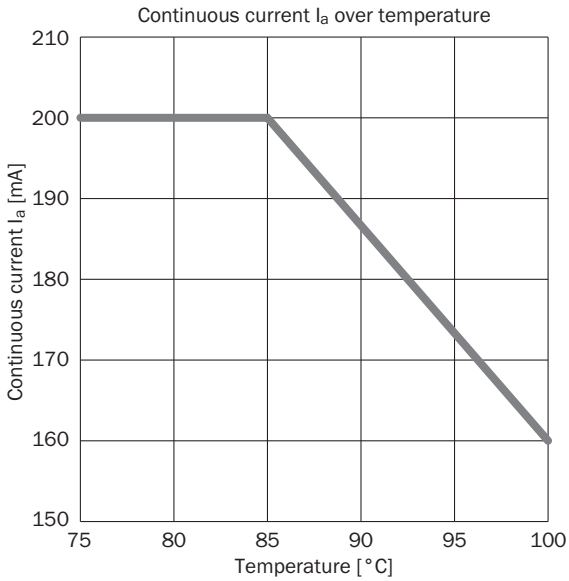

## Response diagram

Response diagram

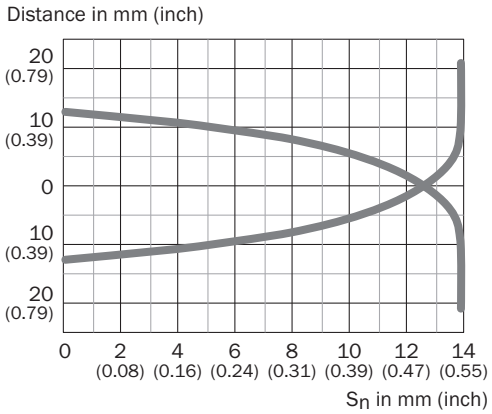


## Dimensional drawing (Dimensions in mm (inch))

IMS30, V4A, flush

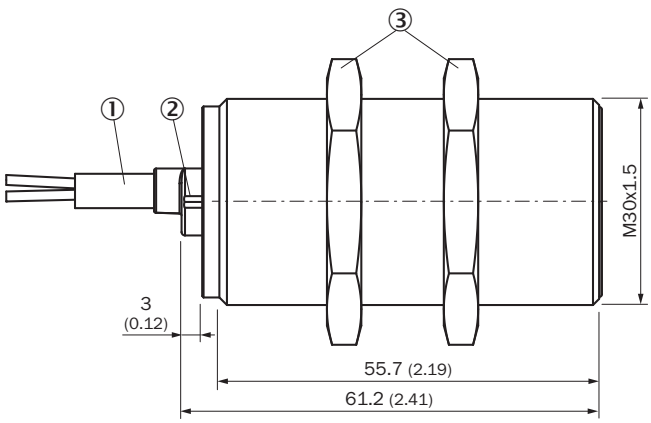


① Connection
② Display LED
③ Fastening nuts (2x); width across 36, brass nickel-plated

## Recommended accessories

Other models and accessories ➜ www.sick.com/IMS

| | Brief description | Type | Part no. |
|---|---|---|---|
| Universal bar clamp systems | | | |
| | Plate N06N for universal clamp bracket, M18, Stainless steel 1.4571 (sheet), Stainless steel 1.4408 (clamp), Universal clamp (5322627), mounting hardware | BEF-KHS-N06N | 2051622 |

# SICK AT A GLANCE

SICK is one of the leading manufacturers of intelligent sensors and sensor solutions for industrial applications. A unique range of products and services creates the perfect basis for controlling processes securely and efficiently, protecting individuals from accidents and preventing damage to the environment.

We have extensive experience in a wide range of industries and understand their processes and requirements. With intelligent sensors, we can deliver exactly what our customers need. In application centers in Europe, Asia and North America, system solutions are tested and optimized in accordance with customer specifications. All this makes us a reliable supplier and development partner.

Comprehensive services complete our offering: SICK LifeTime Services provide support throughout the machine life cycle and ensure safety and productivity.

**For us, that is "Sensor Intelligence."**

# WORLDWIDE PRESENCE:

Contacts and other locations –www.sick.com



SICK
Sensor Intelligence.