Product data sheet

PU3H17-00000000

Device columns with external grooves

COLUMNS FOR SAFETY LIGHT CURTAINS

SICK
Sensor Intelligence.

Ordering information

Type	Part no.
PU3H17-00000000	2045643

Other models and accessories → www.sick.com/Device_columns_with_external_grooves

Detailed technical data

Features

Description	PU3 protective device column for mounting suitable safety light curtains and safety light-beam sensors. Protects the devices from mechanical influences from three sides.
Mounting system type	Mechanical anchoring to the floor
Items supplied	PU3 device column with pre-assembled base plate Mounting instructions for download
Column height	1,740 mm
Suitable for device variants	
deTec safety light curtain	Protective field height ≤ 1,650 mm
C2000, C4000, M4000 Curtain safety light curtain	Protective field height ≤ 1,350 mm
deTem safety light-beam sensor	Any
M2000, M4000 safety light-beam sensor	Any
Compatible brackets	
FlexFix	✓
QuickFix	✓
Flat-Mount	✓
Swivel-Mount	✓
Omega bracket	✓
Additional options	Enables additional accessories, such as muting arms, to be installed.

Mechanical data

Dimensions	See dimensional drawing
L1	1,720 mm [1]
L2	1,740 mm [2]
Cross-section of column profile	138.4 mm x 134.7 mm
Diameter of base plate	180 mm
Weight	12.515 kg

[1] L1 = Column profile height.
[2] L2 = Column height (incl. base plate).

Classifications

ECLASS 5.0	27279202
ECLASS 5.1.4	27279202
ECLASS 6.0	27279202
ECLASS 6.2	27279202
ECLASS 7.0	27279202
ECLASS 8.0	27279202
ECLASS 8.1	27279202
ECLASS 9.0	27273701
ECLASS 10.0	27273701
ECLASS 11.0	27273701
ECLASS 12.0	27273701
ETIM 5.0	EC001941
ETIM 6.0	EC001941
ETIM 7.0	EC001941
ETIM 8.0	EC001941
UNSPSC 16.0901	39111609

Dimensional drawing (Dimensions in mm (inch))

PU3

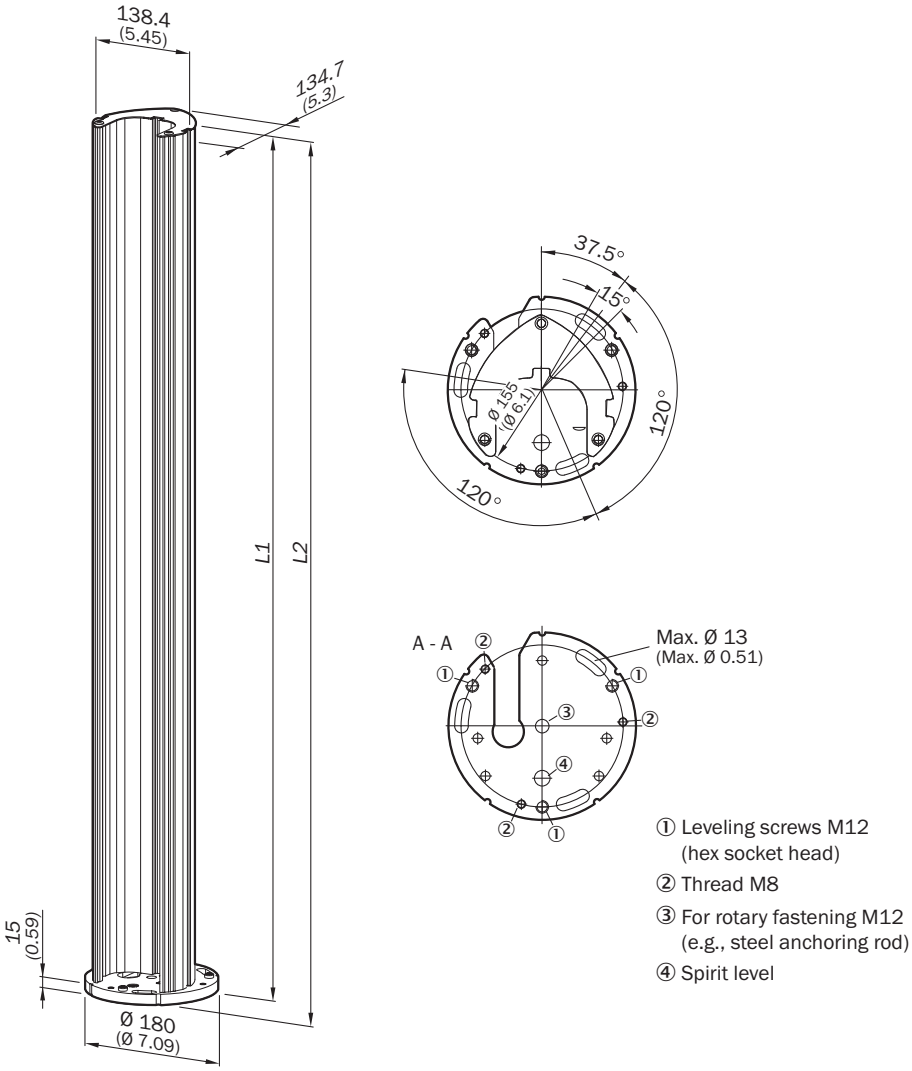

① Leveling screws M12 (hex socket head)
② Thread M8
③ For rotary fastening M12 (e.g., steel anchoring rod)
④ Spirit level

Type	Part no.	L1 = Column profile height	L2 = Column height (incl. base plate)	Safety light curtains		Safety light-beam sensors	
				Suitable for protective field height		Suitable for number of beams	Suitable for beam separation
				deTec	C2000, C4000, M4000 Curtain		
PU3H96-00000000	2045490	965	985	≤ 900 mm	≤ 600 mm	2	500 mm
PU3H11-00000000	2045641	1.165	1.185	≤ 1.050 mm	≤ 900 mm	3	400 mm
PU3H13-00000000	2045642	1.265	1.285	≤ 1.200 mm	≤ 1.050 mm	4	300 mm
PU3H15-00000000	2068813	1.550	1.570	≤ 1.500 mm	≤ 1.350 mm	Any	Any
PU3H17-00000000	2045643	1.720	1.740	≤ 1.650 mm	≤ 1.350 mm	Any	Any
PU3H21-00000000	2045644	2.020	2.040	≤ 1.950 mm	≤ 1.650 mm	Any	Any

Type	Part no.	L1 = Column profile height	L2 = Column height (incl. base plate)	Safety light curtains		Safety light-beam sensors	
				Suitable for protective field height		Suitable for number of beams	Suitable for beam separation
				deTec	C2000, C4000, M4000 Curtain		
PU3H22-00000000	2045645	2.250	2.270	≤ 2.100 mm	≤ 1.800 mm	Any	Any
PU3H24-00000000	2045646	2.400	2.420	≤ 2.100 mm	≤ 1.800 mm	Any	Any

Assembly note

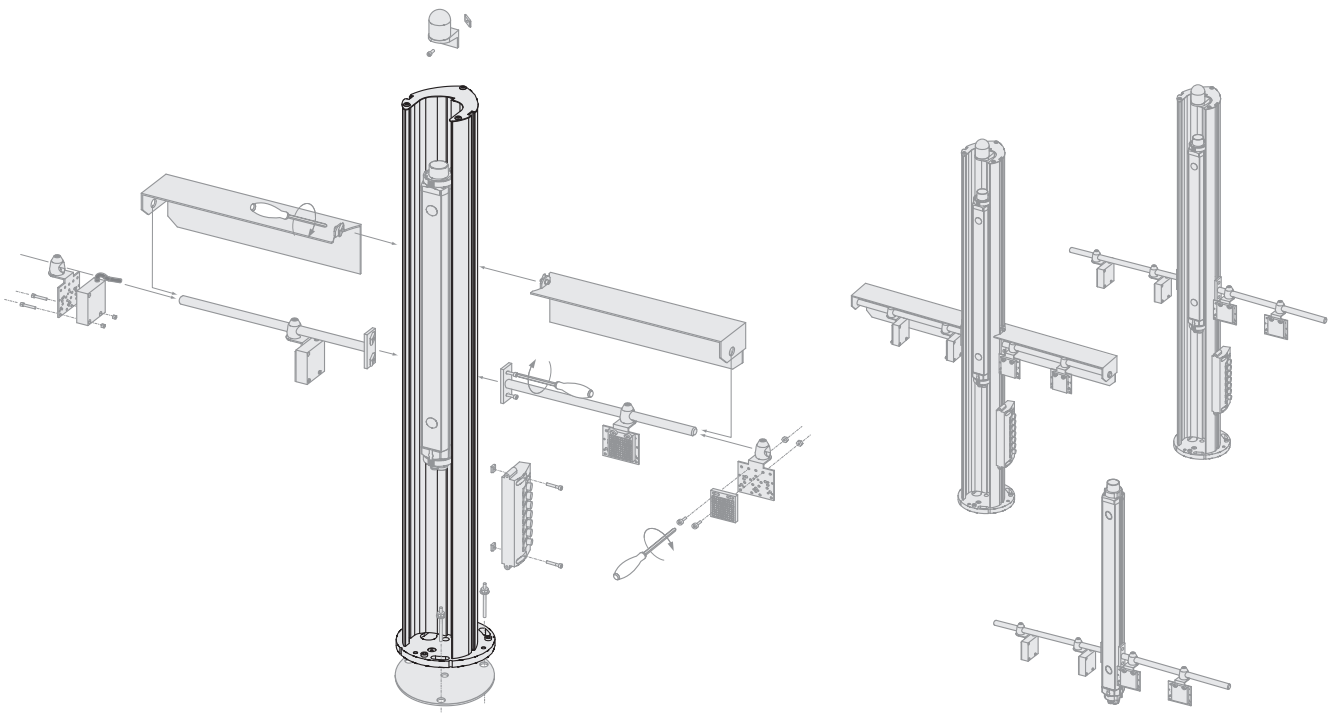

SICK AT A GLANCE

SICK is one of the leading manufacturers of intelligent sensors and sensor solutions for industrial applications. A unique range of products and services creates the perfect basis for controlling processes securely and efficiently, protecting individuals from accidents and preventing damage to the environment.

We have extensive experience in a wide range of industries and understand their processes and requirements. With intelligent sensors, we can deliver exactly what our customers need. In application centers in Europe, Asia and North America, system solutions are tested and optimized in accordance with customer specifications. All this makes us a reliable supplier and development partner.

Comprehensive services complete our offering: SICK LifeTime Services provide support throughout the machine life cycle and ensure safety and productivity.

For us, that is "Sensor Intelligence."

WORLDWIDE PRESENCE:

Contacts and other locations –www.sick.com

SICK
Sensor Intelligence.