Product data sheet

WSE250-2P2431

W250-2

COMPACT PHOTOELECTRIC SENSORS

SICK
Sensor Intelligence.

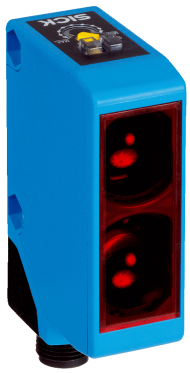

Illustration may differ

Ordering information

Type	Part no.
WSE250-2P2431	6044705

Included in delivery: BEF-W250 (1)

Other models and accessories → www.sick.com/W250-2

Detailed technical data

Features

Functional principle	Through-beam photoelectric sensor
Dimensions (W x H x D)	20 mm x 65 mm x 43.9 mm
Housing design (light emission)	Rectangular
Sensing range max.	0 m ... 50 m
Sensing range	0 m ... 40 m
Focus	Approx. 2°
Type of light	Visible red light
Light source	LED [1]
Light spot size (distance)	Ø 0.6 m (20 m)
Angle of dispersion	Approx. 2°
Adjustment	Potentiometer, 2 turns [2]

[1] Average service life: 100,000 h at T_U = +25 °C.
[2] With position indicator.

Mechanics/electronics

Supply voltage U_B	10 V DC ... 30 V DC [1]
Ripple	< 5 V_{pp} [2]

[1] Limit values when operated in short-circuit protected network: max. 8 A.
[2] May not exceed or fall below U_V tolerances.
[3] Without load.
[4] Signal transit time with resistive load.
[5] With light/dark ratio 1:1.
[6] Rotatable through 90°.
[7] A = V_S connections reverse-polarity protected.
[8] B = inputs and output reverse-polarity protected.
[9] C = interference suppression.
[10] D = outputs overcurrent and short-circuit protected.
[11] The AC/DC devices comply with the Radio Safety Requirements for the industrial sector (Radio Safety Class A). They may cause radio interference if used in a residential area.

Power consumption, sender	20 mA [3]
Power consumption, receiver	20 mA [3]
Switching output	PNP
Switching mode	Light/dark switching
Switching mode selector	Selectable via L/D control cable
Output current $I_{max.}$	≤ 100 mA
Response time	≤ 0.5 ms [4]
Switching frequency	1,000 Hz [5]
Angle of reception	20°
Connection type	Male connector M12, 4-pin [6]
Circuit protection	A [7] B [8] C [9] D [10]
Protection class	III
Weight	80 g
Housing material	Plastic, ABS
Optics material	Plastic, PMMA
Enclosure rating	IP67
Items supplied	BEF-W250 mounting bracket
Electromagnetic compatibility (EMC)	EN 60947-5-2 [11]
Ambient operating temperature	–25 °C ... +55 °C
Ambient temperature, storage	–40 °C ... +70 °C
UL File No.	NRKH2.E300503 & NRKH8.E300503

[1] Limit values when operated in short-circuit protected network: max. 8 A.
[2] May not exceed or fall below U_V tolerances.
[3] Without load.
[4] Signal transit time with resistive load.
[5] With light/dark ratio 1:1.
[6] Rotatable through 90°.
[7] A = V_S connections reverse-polarity protected.
[8] B = inputs and output reverse-polarity protected.
[9] C = interference suppression.
[10] D = outputs overcurrent and short-circuit protected.
[11] The AC/DC devices comply with the Radio Safety Requirements for the industrial sector (Radio Safety Class A). They may cause radio interference if used in a residential area.

Safety-related parameters

$MTTF_D$	3,252 years
DC_{avg}	0 %

Classifications

ECLASS 5.0	27270901
ECLASS 5.1.4	27270901
ECLASS 6.0	27270901
ECLASS 6.2	27270901

ECLASS 7.0	27270901
ECLASS 8.0	27270901
ECLASS 8.1	27270901
ECLASS 9.0	27270901
ECLASS 10.0	27270901
ECLASS 11.0	27270901
ECLASS 12.0	27270901
ETIM 5.0	EC002716
ETIM 6.0	EC002716
ETIM 7.0	EC002716
ETIM 8.0	EC002716
UNSPSC 16.0901	39121528

Dimensional drawing (Dimensions in mm (inch))

WSE250-2, DC, connector

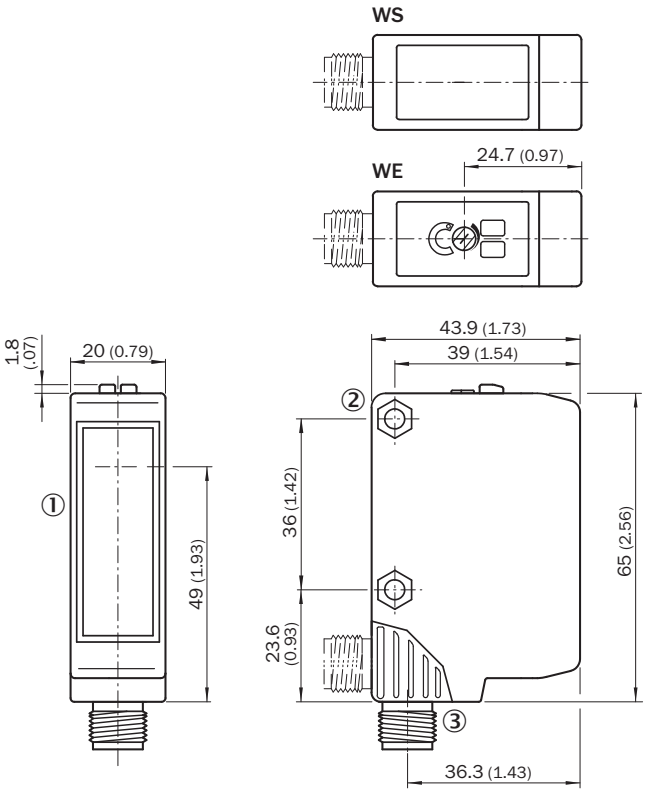

① Center of the optical axis, sender (WS 250), receiver (WE 250)
② Mounting hole ø 4.2 mm, for M4 hexagon nuts on both sides
③ Connector M12, 4-pin: Connector position rotatable by 90° (V>H); V: Vertikal final position; H: Horizontal final position, can be locked with slider

Adjustments

WSE250-2, sender

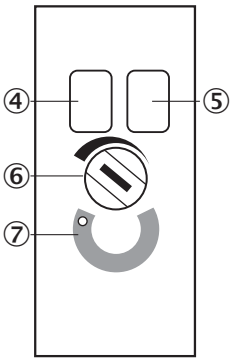

④ LED indicator green: Stability indicator
⑤ LED indicator yellow: Status of received light beam
⑥ Sensitivity control: potentiometer
⑦ Position indicator for sensitivity setting (270°)

Connection diagram

Cd-060

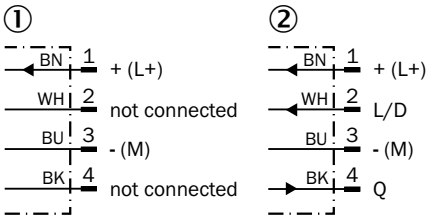

① Sender
② Receiver

Characteristic curve

WSE250-2

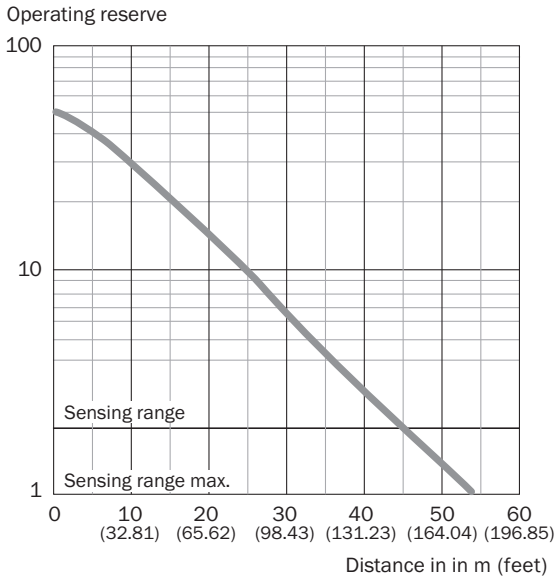

Sensing range diagram

WSE250-2

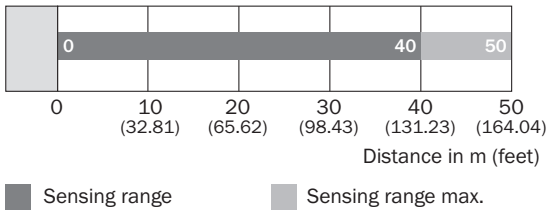

Recommended accessories

Other models and accessories ➜ www.sick.com/W250-2

	Brief description	Type	Part no.
Plug connectors and cables			
	• **Connection type head A:** Male connector, M12, 4-pin, straight • **Description:** Unshielded • **Connection systems:** Screw-type terminals • **Permitted cross-section:** ≤ 0.75 mm²	STE-1204-G	6009932
Others			
	• **Connection type head A:** Female connector, M12, 4-pin, straight, A-coded • **Connection type head B:** Flying leads • **Signal type:** Sensor/actuator cable • **Cable:** 5 m, 4-wire, PVC • **Description:** Sensor/actuator cable, unshielded • **Application:** Zones with chemicals	YF2A14-050VB3XLEAX	2096235

SICK AT A GLANCE

SICK is one of the leading manufacturers of intelligent sensors and sensor solutions for industrial applications. A unique range of products and services creates the perfect basis for controlling processes securely and efficiently, protecting individuals from accidents and preventing damage to the environment.

We have extensive experience in a wide range of industries and understand their processes and requirements. With intelligent sensors, we can deliver exactly what our customers need. In application centers in Europe, Asia and North America, system solutions are tested and optimized in accordance with customer specifications. All this makes us a reliable supplier and development partner.

Comprehensive services complete our offering: SICK LifeTime Services provide support throughout the machine life cycle and ensure safety and productivity.

For us, that is "Sensor Intelligence."

WORLDWIDE PRESENCE:

Contacts and other locations –www.sick.com

SICK
Sensor Intelligence.