Product data sheet

IMB12-04BNSVC0S

IMB

INDUCTIVE PROXIMITY SENSORS

SICK
Sensor Intelligence.

Illustration may differ

Ordering information

Type	Part no.
IMB12-04BNSVC0S	1072737

Included in delivery: BEF-MU-M12N (1)

Other models and accessories → www.sick.com/IMB

Detailed technical data

Features

Housing	Metric
Housing	Standard design
Thread size	M12 x 1
Diameter	Ø 12 mm
Sensing range S_n	4 mm
Safe sensing range S_a	3.24 mm
Installation type	Flush
Switching frequency	2,000 Hz
Connection type	Male connector M12, 4-pin [1]
Switching output	NPN
Output function	NO
Electrical wiring	DC 3-wire
Enclosure rating	IP68 [2] IP69K [3]
Special features	Resistant against coolant lubricants, Visual adjustment indicator, Temperature resistance
Special applications	Zones with coolants and lubricants, Mobile machines, Difficult application conditions
Items supplied	Mounting nut, V2A stainless steel, with locking teeth (2x)

[1] With gold plated contact pins.
[2] According to EN 60529.
[3] According to ISO 20653:2013-03.

Mechanics/electronics

Supply voltage	10 V DC ... 30 V DC
Ripple	≤ 10 %
Voltage drop	≤ 2 V [1]
Hysteresis	3 % ... 20 %
Reproducibility	≤ 2 % [2] [3]
Temperature drift (of S_r)	± 10 %
EMC	According to EN 60947-5-2
Continuous current I_a	≤ 200 mA
No load current	≤ 10 mA
Short-circuit protection	✓
Reverse polarity protection	✓
Power-up pulse protection	✓
Shock and vibration resistance	100 g / 2 ms / 500 cycles; 150 g / 1 Mio cycles; 10 Hz ... 55 Hz / 1 mm; 55 Hz ... 500 Hz / 60 g
Ambient operating temperature	–40 °C ... +100 °C
Housing material	Stainless steel V2A, DIN 1.4305 / AISI 303
Sensing face material	Plastic, LCP
Housing length	65 mm
Thread length	48 mm
Tightening torque, max.	Typ. 20 Nm [4] Typ. 32 Nm [5]
Protection class	III
UL File No.	E181493

[1] At I_a max.
[2] Supply voltage U_B and constant ambient temperature Ta.
[3] Of Sr.
[4] When using the non-toothed side of the nut.
[5] Valid if toothed side of nut is used.

Safety-related parameters

$MTTF_D$	1,971 years
DC_{avg}	0 %

Reduction factors

Note	The values are reference values which may vary
St37 steel (Fe)	1
Stainless steel (V2A, 304)	Approx. 0.65
Aluminum (Al)	Approx. 0.35
Copper (Cu)	Approx. 0.24
Brass (Br)	Approx. 0.38

Installation note

Remark	Associated graphic see "Installation"

B	12 mm
C	12 mm
D	12 mm
F	32 mm

Classifications

ECLASS 5.0	27270101
ECLASS 5.1.4	27270101
ECLASS 6.0	27270101
ECLASS 6.2	27270101
ECLASS 7.0	27270101
ECLASS 8.0	27270101
ECLASS 8.1	27270101
ECLASS 9.0	27270101
ECLASS 10.0	27270101
ECLASS 11.0	27270101
ECLASS 12.0	27274001
ETIM 5.0	EC002714
ETIM 6.0	EC002714
ETIM 7.0	EC002714
ETIM 8.0	EC002714
UNSPSC 16.0901	39122230

Adjustments

Installation aid

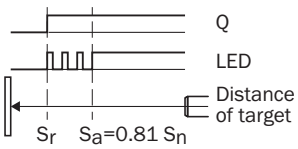

Installation note

Flush installation

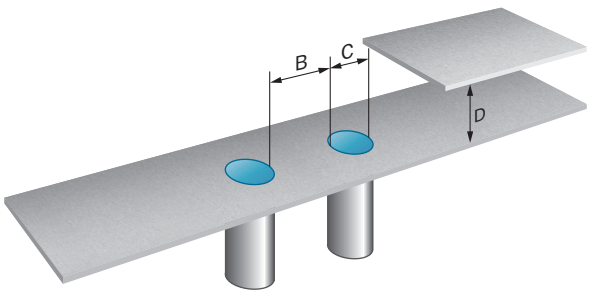

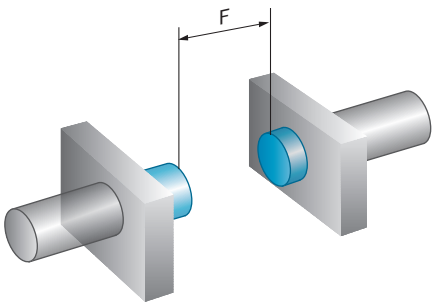

Connection diagram

Cd-007

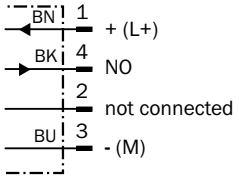

Response diagram

Response diagram

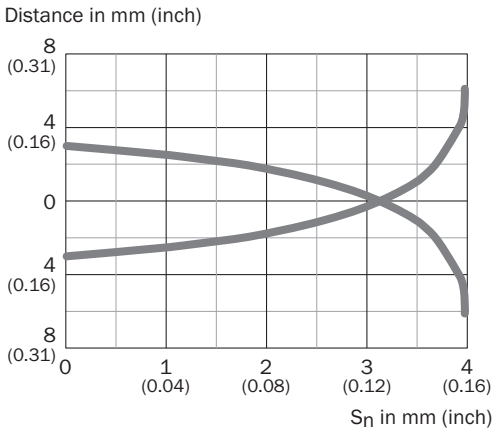

Dimensional drawing (Dimensions in mm (inch))

IMB12 Standard, connector, M12, flush

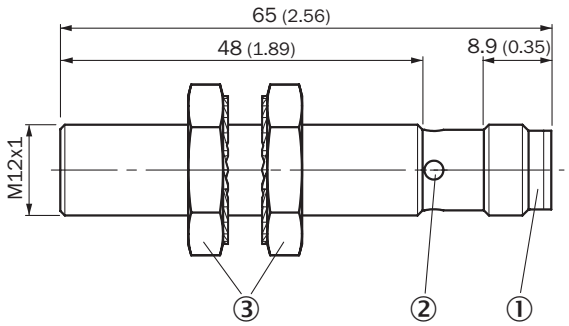

① Connection
② Display LED
③ Fastening nuts (2 x); width across 17, stainless steel V2A

Recommended accessories

Other models and accessories ➜ www.sick.com/IMB

	Brief description	Type	Part no.
Universal bar clamp systems			
	Plate N05N for universal clamp bracket, M12, Stainless steel 1.4571 (sheet), Stainless steel 1.4408 (clamp), Universal clamp (5322627), mounting hardware	BEF-KHS-N05N	2051621
Mounting brackets and plates			
	Mounting plate for M12 sensors, stainless steel, without mounting hardware	BEF-WG-M12N	5320950
	Mounting bracket for M12 housing, stainless steel, without mounting hardware	BEF-WN-M12N	5320949
Others			
	• **Connection type head A:** Female connector, M12, 4-pin, straight • **Connection type head B:** Flying leads • **Signal type:** Sensor/actuator cable • **Cable:** 2 m, 4-wire, PP • **Description:** Sensor/actuator cable, unshielded • **Connection systems:** Flying leads • **Note:** This product is generally resistant to chemical cleaning agents (see ECOLAB) and other chemical compounds such as H2O2 and CH2O2. Before permanent installation is carried out, the material's resistance to the cleaning agent being used must be checked., Resistant against lactic acid & hydrogen peroxide (H2O2) • **Application:** Hygienic and washdown zones, Drag chain operation	DOL-1204-G02MRN	6058291
	• **Connection type head A:** Female connector, M12, 4-pin, straight • **Connection type head B:** Flying leads • **Signal type:** Sensor/actuator cable • **Cable:** 5 m, 4-wire, PP • **Description:** Sensor/actuator cable, unshielded • **Connection systems:** Flying leads • **Note:** This product is generally resistant to chemical cleaning agents (see ECOLAB) and other chemical compounds such as H2O2 and CH2O2. Before permanent installation is carried out, the material's resistance to the cleaning agent being used must be checked., Resistant against lactic acid & hydrogen peroxide (H2O2) • **Application:** Hygienic and washdown zones, Drag chain operation	DOL-1204-G05MRN	6058476
	• **Connection type head A:** Female connector, M12, 4-pin, angled • **Connection type head B:** Flying leads • **Signal type:** Sensor/actuator cable • **Cable:** 2 m, 4-wire, PP • **Description:** Sensor/actuator cable, unshielded • **Connection systems:** Flying leads • **Note:** This product is generally resistant to chemical cleaning agents (see ECOLAB) and other chemical compounds such as H2O2 and CH2O2. Before permanent installation is carried out, the material's resistance to the cleaning agent being used must be checked., Resistant against lactic acid & hydrogen peroxide (H2O2) • **Application:** Hygienic and washdown zones, Drag chain operation	DOL-1204-W02MRN	6058474
	• **Connection type head A:** Female connector, M12, 4-pin, angled • **Connection type head B:** Flying leads • **Signal type:** Sensor/actuator cable • **Cable:** 5 m, 4-wire, PP • **Description:** Sensor/actuator cable, unshielded • **Connection systems:** Flying leads • **Note:** This product is generally resistant to chemical cleaning agents (see ECOLAB) and other chemical compounds such as H2O2 and CH2O2. Before permanent installation is carried out, the material's resistance to the cleaning agent being used must be checked., Resistant against lactic acid & hydrogen peroxide (H2O2) • **Application:** Hygienic and washdown zones, Drag chain operation	DOL-1204-W05MRN	6058477

	Brief description	Type	Part no.
	• **Connection type head A:** Female connector, M12, 4-pin, angled • **Connection type head B:** Flying leads • **Signal type:** Sensor/actuator cable • **Cable:** 2 m, 4-wire, PP • **Description:** Sensor/actuator cable, unshielded, LED function display • **Connection systems:** Flying leads • **Note:** This product is generally resistant to chemical cleaning agents (see ECOLAB) and other chemical compounds such as H2O2 and CH2O2. Before permanent installation is carried out, the material's resistance to the cleaning agent being used must be checked., Resistant against lactic acid & hydrogen peroxide (H2O2), only suitable for PNP sensors • **Application:** Hygienic and washdown zones, Drag chain operation	DOL-1204-L02MRN	6058482
	• **Connection type head A:** Female connector, M12, 4-pin, angled • **Connection type head B:** Flying leads • **Signal type:** Sensor/actuator cable • **Cable:** 5 m, 4-wire, PP • **Description:** Sensor/actuator cable, unshielded, LED function display • **Connection systems:** Flying leads • **Note:** This product is generally resistant to chemical cleaning agents (see ECOLAB) and other chemical compounds such as H2O2 and CH2O2. Before permanent installation is carried out, the material's resistance to the cleaning agent being used must be checked., Resistant against lactic acid & hydrogen peroxide (H2O2), only suitable for PNP sensors • **Application:** Hygienic and washdown zones, Drag chain operation	DOL-1204-L05MRN	6058483
	• **Connection type head A:** Female connector, M12, 4-pin, angled • **Connection type head B:** Male connector, M12, 4-pin, straight • **Signal type:** Sensor/actuator cable • **Cable:** 2 m, 4-wire, PP • **Description:** Sensor/actuator cable, unshielded • **Note:** This product is generally resistant to chemical cleaning agents (see ECOLAB) and other chemical compounds such as H2O2 and CH2O2. Before permanent installation is carried out, the material's resistance to the cleaning agent being used must be checked., Resistant against lactic acid & hydrogen peroxide (H2O2) • **Application:** Hygienic and washdown zones, Drag chain operation	DSL-1204-B02MRN	6058502
	• **Connection type head A:** Female connector, M12, 4-pin, angled • **Connection type head B:** Male connector, M12, 4-pin, straight • **Signal type:** Sensor/actuator cable • **Cable:** 5 m, 4-wire, PP • **Description:** Sensor/actuator cable, unshielded • **Note:** This product is generally resistant to chemical cleaning agents (see ECOLAB) and other chemical compounds such as H2O2 and CH2O2. Before permanent installation is carried out, the material's resistance to the cleaning agent being used must be checked., Resistant against lactic acid & hydrogen peroxide (H2O2) • **Application:** Hygienic and washdown zones, Drag chain operation	DSL-1204-B05MRN	6058503
	• **Connection type head A:** Female connector, M12, 4-pin, straight • **Connection type head B:** Male connector, M12, 4-pin, straight • **Signal type:** Sensor/actuator cable • **Cable:** 2 m, 4-wire, PP • **Description:** Sensor/actuator cable, unshielded • **Note:** This product is generally resistant to chemical cleaning agents (see ECOLAB) and other chemical compounds such as H2O2 and CH2O2. Before permanent installation is carried out, the material's resistance to the cleaning agent being used must be checked., Resistant against lactic acid & hydrogen peroxide (H2O2) • **Application:** Hygienic and washdown zones, Drag chain operation	DSL-1204-G02MRN	6058499
	• **Connection type head A:** Female connector, M12, 4-pin, straight • **Connection type head B:** Male connector, M12, 4-pin, straight • **Signal type:** Sensor/actuator cable • **Cable:** 5 m, 4-wire, PP • **Description:** Sensor/actuator cable, unshielded • **Note:** This product is generally resistant to chemical cleaning agents (see ECOLAB) and other chemical compounds such as H2O2 and CH2O2. Before permanent installation is carried out, the material's resistance to the cleaning agent being used must be checked., Resistant against lactic acid & hydrogen peroxide (H2O2) • **Application:** Hygienic and washdown zones, Drag chain operation	DSL-1204-G05MRN	6058500

	Brief description	Type	Part no.
	• **Connection type head A:** Female connector, M12, 4-pin, straight, A-coded • **Connection type head B:** Male connector, M12, 4-pin, straight, A-coded • **Signal type:** Sensor/actuator cable • **Cable:** 10 m, 4-wire, PUR, halogen-free • **Description:** Sensor/actuator cable, unshielded • **Application:** Zones with oils and lubricants, Drag chain operation, Robot	YF2A14-100UB3M2A14	2096002
	• **Connection type head A:** Male connector, M12, 4-pin, straight, A-coded • **Connection type head B:** Flying leads • **Signal type:** Sensor/actuator cable • **Cable:** 10 m, 4-wire, PUR, halogen-free • **Description:** Sensor/actuator cable, unshielded • **Application:** Zones with oils and lubricants, Drag chain operation, Robot	YM2A14-100UB3XLEAX	2095859
	• **Connection type head A:** Male connector, M12, 4-pin, straight, A-coded • **Connection type head B:** Flying leads • **Signal type:** Sensor/actuator cable • **Cable:** 15 m, 4-wire, PUR, halogen-free • **Description:** Sensor/actuator cable, unshielded • **Application:** Zones with oils and lubricants, Drag chain operation, Robot	YM2A14-150UB3XLEAX	2095866
	• **Connection type head A:** Male connector, M12, 4-pin, angled, A-coded • **Connection type head B:** Flying leads • **Signal type:** Sensor/actuator cable • **Cable:** 10 m, 4-wire, PUR, halogen-free • **Description:** Sensor/actuator cable, unshielded • **Application:** Zones with oils and lubricants, Drag chain operation, Robot	YN2A14-100UB3XLEAX	2096629
	• **Connection type head A:** Female connector, M12, 4-pin, straight, A-coded • **Connection type head B:** Flying leads • **Signal type:** Sensor/actuator cable • **Cable:** 10 m, 4-wire, PUR, halogen-free • **Description:** Sensor/actuator cable, unshielded • **Application:** Zones with oils and lubricants, Drag chain operation, Robot	YF2A14-100UB3XLEAX	2095609
	• **Connection type head A:** Female connector, M12, 4-pin, straight, A-coded • **Connection type head B:** Flying leads • **Signal type:** Sensor/actuator cable • **Cable:** 15 m, 4-wire, PUR, halogen-free • **Description:** Sensor/actuator cable, unshielded • **Application:** Zones with oils and lubricants, Drag chain operation, Robot	YF2A14-150UB3XLEAX	2095610
	• **Connection type head A:** Female connector, M12, 4-pin, straight, A-coded • **Connection type head B:** Flying leads • **Signal type:** Sensor/actuator cable • **Cable:** 20 m, 4-wire, PUR, halogen-free • **Description:** Sensor/actuator cable, unshielded • **Application:** Zones with oils and lubricants, Drag chain operation, Robot	YF2A14-200UB3XLEAX	2095611
	• **Connection type head A:** Female connector, M12, 4-pin, straight, A-coded • **Connection type head B:** Flying leads • **Signal type:** Sensor/actuator cable • **Cable:** 25 m, 4-wire, PUR, halogen-free • **Description:** Sensor/actuator cable, unshielded • **Application:** Zones with oils and lubricants, Drag chain operation, Robot	YF2A14-250UB3XLEAX	2095615
	• **Connection type head A:** Female connector, M12, 4-pin, angled, A-coded • **Connection type head B:** Flying leads • **Signal type:** Sensor/actuator cable • **Cable:** 10 m, 4-wire, PUR, halogen-free • **Description:** Sensor/actuator cable, unshielded • **Application:** Zones with oils and lubricants, Drag chain operation, Robot	YG2A14-100UB3XLEAX	2095768
	• **Connection type head A:** Female connector, M12, 4-pin, angled, A-coded • **Connection type head B:** Flying leads • **Signal type:** Sensor/actuator cable • **Cable:** 15 m, 4-wire, PUR, halogen-free • **Description:** Sensor/actuator cable, unshielded • **Application:** Zones with oils and lubricants, Drag chain operation, Robot	YG2A14-150UB3XLEAX	2095769

	Brief description	Type	Part no.
	• **Connection type head A:** Female connector, M12, 4-pin, angled, A-coded • **Connection type head B:** Flying leads • **Signal type:** Sensor/actuator cable • **Cable:** 20 m, 4-wire, PUR, halogen-free • **Description:** Sensor/actuator cable, unshielded • **Application:** Zones with oils and lubricants, Drag chain operation, Robot	YG2A14-200UB3XLEAX	2095770
	• **Connection type head A:** Female connector, M12, 4-pin, angled, A-coded • **Connection type head B:** Flying leads • **Signal type:** Sensor/actuator cable • **Cable:** 25 m, 4-wire, PUR, halogen-free • **Description:** Sensor/actuator cable, unshielded • **Application:** Zones with oils and lubricants, Drag chain operation, Robot	YG2A14-250UB3XLEAX	2095771

SICK AT A GLANCE

SICK is one of the leading manufacturers of intelligent sensors and sensor solutions for industrial applications. A unique range of products and services creates the perfect basis for controlling processes securely and efficiently, protecting individuals from accidents and preventing damage to the environment.

We have extensive experience in a wide range of industries and understand their processes and requirements. With intelligent sensors, we can deliver exactly what our customers need. In application centers in Europe, Asia and North America, system solutions are tested and optimized in accordance with customer specifications. All this makes us a reliable supplier and development partner.

Comprehensive services complete our offering: SICK LifeTime Services provide support throughout the machine life cycle and ensure safety and productivity.

For us, that is "Sensor Intelligence."

WORLDWIDE PRESENCE:

Contacts and other locations –www.sick.com

SICK
Sensor Intelligence.