Product data sheet

NANS3-CAAZ30AN1

nanoScan3

SAFETY LASER SCANNERS

SICK
Sensor Intelligence.

Illustration may differ

Ordering information

Integration in the control system	Sub product family	Protective field range	Number of fields	Number of monitoring cases	Type	Part no.
Local inputs and outputs (I/O)	nanoScan3 Pro I/O	3 m	128	128	NANS3-CAAZ30AN1	1100334

The system plug has to be ordered separately. For details, see “Accessories, plug connnectors and cables”.

Other models and accessories → www.sick.com/nanoScan3

Detailed technical data

Features

Sub product family	nanoScan3 Pro I/O
Model	Sensor without system plug
Application	Indoor
Protective field range	3 m
Warning field range	10 m
Distance measuring range	40 m
Number of simultaneously monitored fields	≤ 8 [1) 2)]
Number of fields	128
Number of monitoring cases	128
Scanning angle	275°
Resolution (can be configured)	20 mm 30 mm 40 mm 50 mm 60 mm 70 mm 150 mm 200 mm
Angular resolution	0.17°
Response time	≥ 70 ms
Protective field supplement	65 mm

[1)] Protection, warning or contour detection fields.
[2)] Please note the number of available OSSD pairs.

Safety-related parameters

Type	Type 3 (IEC 61496)
Safety integrity level	SIL 2 (IEC 61508)

Category	Category 3 (EN ISO 13849)
Performance level	PL d (EN ISO 13849)
PFH_D (mean probability of a dangerous failure per hour)	8.0×10^{-8}
T_M (mission time)	20 years (EN ISO 13849)
Safe state in the event of a fault	At least one OSSD is in the OFF state.

Functions

Restart interlock	✓
External device monitoring (EDM)	✓
Multiple sampling	✓
Monitoring case switching	✓
Simultaneous monitoring	✓
Static protective field switching	✓
Dynamic protective field switching	✓
Safe contour detection	✓
Contour as a reference	✓
Integrated configuration memory	✓
Measured data output	Via Ethernet

Interfaces

Connection type	Depending on system plug
Universal I/Os	4 [1]
Outputs	
OSSD pairs	≤ 2 [2]
Inputs	
Universal inputs	≤ 8 [3]
Dynamic switching signals	≤ 4 [2]
Static control inputs	≤ 6 [2]
Configuration method	PC with Safety Designer (Configuration and Diagnostic Software)
Configuration and diagnostics interface	USB 2.0, micro USB
Data interface	
Services	CoLa 2 (configuration and diagnostics using Safety Designer) Data output DHCP SNTP
Display elements	Graphic color display, LEDs

[1] Freely programmable as input or output, e.g. external device monitoring input, reset input, static control input, contamination warning, warning field, reset required.
[2] Availability depends on the configuration of the universal I/Os and universal inputs.
[3] Freely programmable input, e.g. external device monitoring input, reset input, static control input.

Electrical data

Protection class	III (EN 61140)
Supply voltage V_s	24 V DC (16.8 V DC ... 30 V DC)
Power consumption typical	3.9 W (without output load)

Mechanical data

Dimensions (W x H x D)	106.6 mm x 80 mm x 117.5 mm (including system plug)
Weight	0.67 kg
Housing material	Aluminum
Housing color	RAL 1021 (yellow), RAL 9005 (black)
Optics cover material	Polycarbonate

Ambient data

Enclosure rating	IP65 (IEC 60529)
Ambient light immunity	≤ 40 klx (IEC 61496-3) [1]
Ambient operating temperature	–10 °C ... +50 °C
Storage temperature	–25 °C ... +70 °C
Vibration resistance	IEC 60068-2-6, IEC 60068-2-64, IEC 60721-3-5, IEC TR 60721-4-5, IEC 61496-3
Class	5M1 (IEC 60721-3-5)
Shock resistance	IEC 60068-2-27, IEC 60721-3-5, IEC TR 60721-4-5, IEC 61496-3
Class	5M1 (IEC 60721-3-5)
Continuous shock	50 m/s², 11 ms 100 m/s², 16 ms
EMC	IEC 61496-1, IEC 61000-6-2, IEC 61000-6-3

[1] Typical ambient light immunity, for ambient light sources directly in the scan plane in accordance with IEC 61496-3: ≤ 3 klx.

Other information

Type of light	Pulsed laser diode
Wave length	905 nm
Detectable remission factor	1.8% to several 1000%
Laser class	1 (21 CFR 1040.10 and 1040.11, IEC 60825-1)

Classifications

ECLASS 5.0	27272705
ECLASS 5.1.4	27272705
ECLASS 6.0	27272705
ECLASS 6.2	27272705
ECLASS 7.0	27272705
ECLASS 8.0	27272705
ECLASS 8.1	27272705
ECLASS 9.0	27272705
ECLASS 10.0	27272705
ECLASS 11.0	27272705
ECLASS 12.0	27272705
ETIM 5.0	EC002550
ETIM 6.0	EC002550
ETIM 7.0	EC002550
ETIM 8.0	EC002550
UNSPSC 16.0901	39121528

Dimensional drawing (Dimensions in mm (inch))

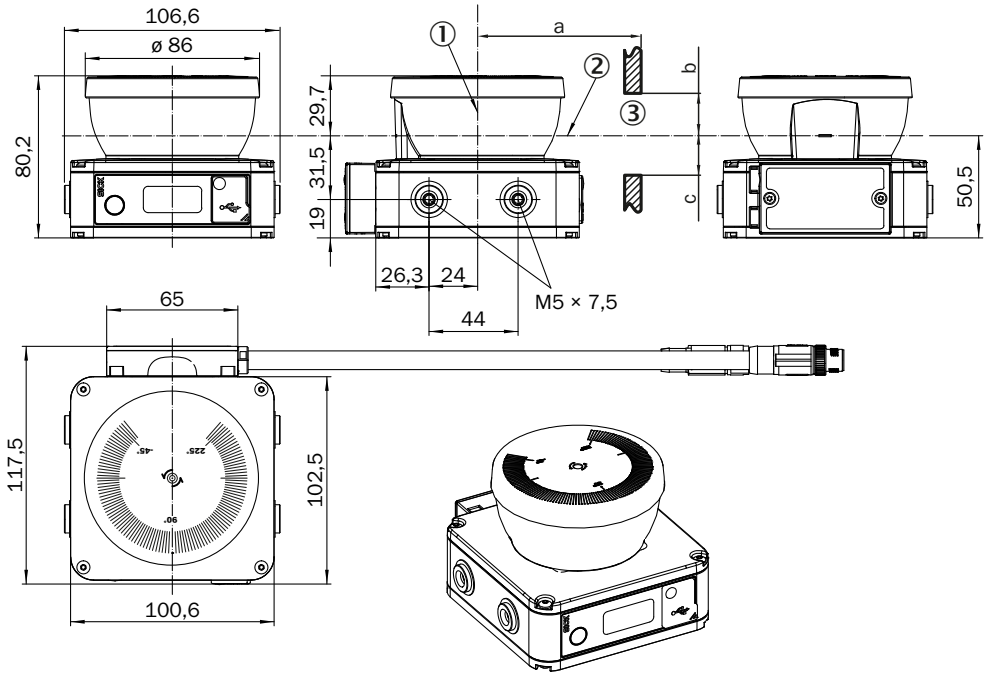

① Mirror axis of rotation
② Scan plane
③ Required viewing slit (a: length of the viewing slit, b: minimum height above the scan plane, c: minimum height below the scan plane. See the operating instructions for details.)

Recommended accessories

Other models and accessories ➜ www.sick.com/nanoScan3

	Brief description	Type	Part no.
Mounting brackets and plates			
	1 piece, Alignment bracket, alignment with cross-wise axis and depth axis possible	Mounting kit 2a	2111769
	1 piece, Mounting bracket	Mounting kit 1a	2111767
	1 piece, Mounting bracket with optics cover protection	Mounting kit 1b	2111768
	1 piece, Alignment bracket with protection for the optics cover, alignment with cross-wise axis and depth axis possible	Mounting kit 2b	2111770
Others			
	• **Connection type head A:** System plug • **Description:** Integrated configuration memory, System connection; voltage supply: cable 300 mm with M12 male connector, 17-pin, A-coded, Ethernet: cable 250 mm with M12 female connector, 4-pin, D-coded	NANSX-AAACAEZZ1	2104860

	Brief description	Type	Part no.
	• **Connection type head A:** System plug • **Description:** Integrated configuration memory, System connection; voltage supply: cable 300 mm with M12 male connector, 17-pin A-coded	NANSX-AAACZZZZ1	2105107
	• **Connection type head A:** System plug • **Description:** Integrated configuration memory, System connection; voltage supply: cable 2 m with flying leads, 17-wire	NANSX-AACCZZZZ1	2105109
	• **Connection type head A:** System plug • **Description:** Integrated configuration memory, System connection; voltage supply: cable 2 m with flying leads, 17-wire, Ethernet: cable 250 mm with M12 female connector, 4-pin, D-coded	NANSX-AACCAEZZ1	2105108

SICK AT A GLANCE

SICK is one of the leading manufacturers of intelligent sensors and sensor solutions for industrial applications. A unique range of products and services creates the perfect basis for controlling processes securely and efficiently, protecting individuals from accidents and preventing damage to the environment.

We have extensive experience in a wide range of industries and understand their processes and requirements. With intelligent sensors, we can deliver exactly what our customers need. In application centers in Europe, Asia and North America, system solutions are tested and optimized in accordance with customer specifications. All this makes us a reliable supplier and development partner.

Comprehensive services complete our offering: SICK LifeTime Services provide support throughout the machine life cycle and ensure safety and productivity.

For us, that is "Sensor Intelligence."

WORLDWIDE PRESENCE:

Contacts and other locations –www.sick.com

SICK
Sensor Intelligence.