Product data sheet

IQ40-15BUP-KK0

IQ Standard

INDUCTIVE PROXIMITY SENSORS

SICK
Sensor Intelligence.

Ordering information

Type	Part no.
IQ40-15BUP-KK0	7902136

Other models and accessories ➜ www.sick.com/IQ_Standard

Detailed technical data

Features

Housing	Rectangular
Housing	Standard design
Dimensions (W x H x D)	40 mm x 40 mm x 121 mm
Sensing range S_n	15 mm
Safe sensing range S_a	12.15 mm
Installation type	Flush
Switching frequency	20 Hz [1] 55 Hz [2]
Connection type	Terminal connection with M20 gland
Output function	NC or NO
Output characteristic	Wire configurable
Electrical wiring	AC/DC 2-wire
Enclosure rating	IP65 [3]

[1] AC.
[2] DC.
[3] According to EN 60529.

Mechanics/electronics

Supply voltage	20 V AC/DC ... 250 V AC/DC
Voltage drop	≤ 6.5 V (AC) ≤ 6 V (DC)
Hysteresis	1 % ... 15 %
Reproducibility	≤ 10 % [1) 2) 3)]
Temperature drift (of S_r)	± 10 %
EMC	As per EN 55011, class B According to EN 60947-5-2
Continuous current I_a	≤ 350 mA [4)] ≤ 250 mA [5)] ≤ 100 mA [6)]
Off-state current	≤ 2.5 mA (AC 250 V) ≤ 1.3 mA (AC 110 V) ≤ 0.8 mA (DC 24 V)
Minimum load current	> 5 mA
Short-time withstand current	2.2 A [7)]
Cable gland clamping area	M20 1.5
Wire size	≤ 2.5 mm²
Short-circuit protection	[8)]
Shock and vibration resistance	30 g, 11 ms / 10 ... 55 Hz, 1 mm
Ambient operating temperature	–25 °C ... +80 °C
Housing material	Plastic
Sensing face material	Plastic, PPE
Protection class	II
Rated insulation voltage U_i	250 V AC
Usage category	AC-140 [9)] DC-13 [10)]
Contamination rating	3
Rated impulse withstand voltage	4 kV

1) Supply voltage U_B and constant ambient temperature Ta.
2) Of Sr.
3) Repeatability (T_a not constant).
4) AC (+50 °C).
5) AC (+80 °C).
6) DC.
7) 20 ms / 0.5 Hz.
8) Miniature fuse to IEC 60217-2 Sheet 1, ≤ 2 A (quick-blow).
9) Control of small electromagnetic loads with holding currents < 200 mA.
10) Control of solenoids.

Safety-related parameters

$MTTF_D$	964 years
DC_{avg}	0 %
T_M (mission time)	20 years

Reduction factors

Note	The values are reference values which may vary
Stainless steel (V2A, 304)	Approx. 0.7
Aluminum (Al)	Approx. 0.3
Copper (Cu)	Approx. 0.2
Brass (Br)	Approx. 0.4

Installation note

Remark	Associated graphic see "Installation"
A	0 mm
B	40 mm
C	40 mm
D	45 mm
E	0 mm
F	120 mm

Classifications

ECLASS 5.0	27270101
ECLASS 5.1.4	27270101
ECLASS 6.0	27270101
ECLASS 6.2	27270101
ECLASS 7.0	27270101
ECLASS 8.0	27270101
ECLASS 8.1	27270101
ECLASS 9.0	27270101
ECLASS 10.0	27270101
ECLASS 11.0	27270101
ECLASS 12.0	27274001
ETIM 5.0	EC002714
ETIM 6.0	EC002714
ETIM 7.0	EC002714
ETIM 8.0	EC002714
UNSPSC 16.0901	39122230

Installation note

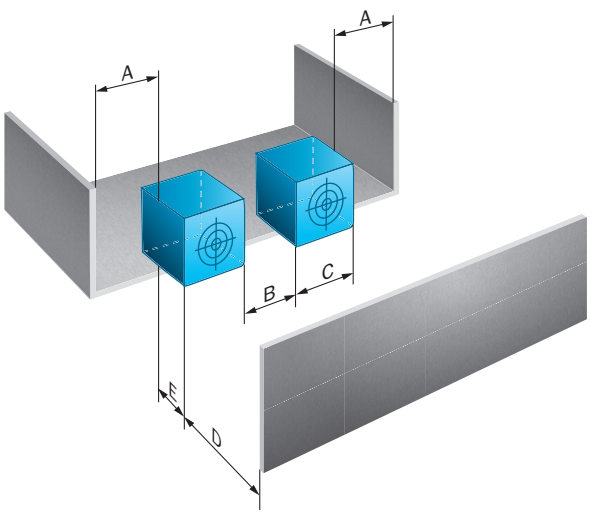

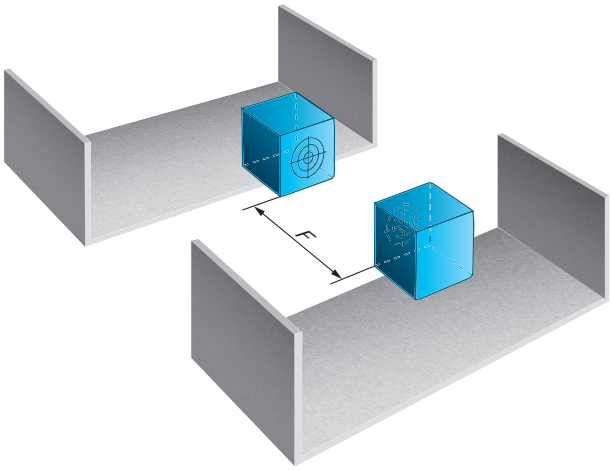

Connection type

Connection diagram

Cd-018

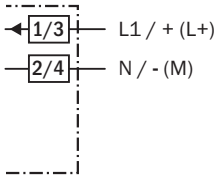

Miniature fuse to IEC60127-2
sheet 1, ≤ 2 A (fast acting)

Dimensional drawing (Dimensions in mm (inch))

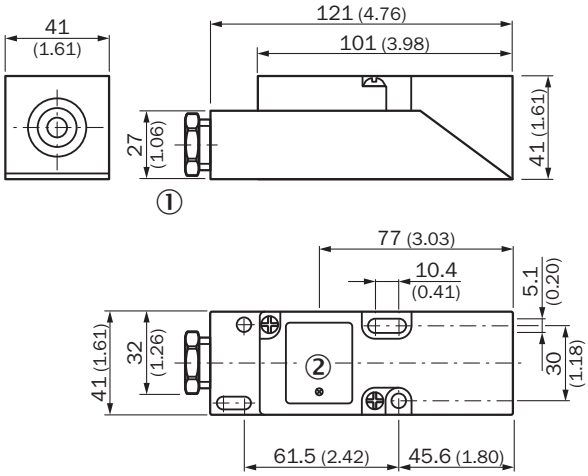

① Connection
② Display LED

SICK AT A GLANCE

SICK is one of the leading manufacturers of intelligent sensors and sensor solutions for industrial applications. A unique range of products and services creates the perfect basis for controlling processes securely and efficiently, protecting individuals from accidents and preventing damage to the environment.

We have extensive experience in a wide range of industries and understand their processes and requirements. With intelligent sensors, we can deliver exactly what our customers need. In application centers in Europe, Asia and North America, system solutions are tested and optimized in accordance with customer specifications. All this makes us a reliable supplier and development partner.

Comprehensive services complete our offering: SICK LifeTime Services provide support throughout the machine life cycle and ensure safety and productivity.

For us, that is "Sensor Intelligence."

WORLDWIDE PRESENCE:

Contacts and other locations –www.sick.com

SICK
Sensor Intelligence.