Product data sheet

IME30-38NPSZC0S

IME

INDUCTIVE PROXIMITY SENSORS

SICK
Sensor Intelligence.

Illustration may differ

Ordering information

Type	Part no.
IME30-38NPSZC0S	1071309

Included in delivery: BEF-MU-M30 (1)

Other models and accessories → www.sick.com/IME

Detailed technical data

Features

Housing	Cylindrical thread design
Housing	Standard design
Thread size	M30 x 1.5
Diameter	Ø 30 mm
Sensing range S_n	38 mm
Safe sensing range S_a	30.78 mm
Installation type	Non-flush
Switching frequency	100 Hz
Connection type	Male connector M12, 4-pin
Switching output	PNP
Output function	NO
Electrical wiring	DC 3-wire
Enclosure rating	IP67 [1]
Special features	Triple sensing range
Items supplied	Mounting nut, brass, nickel-plated (2x)

[1] According to EN 60529.

Mechanics/electronics

Supply voltage	10 V DC ... 30 V DC
Ripple	≤ 10 %
Voltage drop	≤ 2 V [1]

[1] At I_a max.

[2] Supply voltage U_B and constant ambient temperature Ta.

[3] Of Sr.

Time delay before availability	≤ 200 ms
Warm-up time	90 s
Hysteresis	1 % ... 15 %
Reproducibility	≤ 5 % [2) 3)]
Temperature drift (of S_r)	± 10 %
EMC	According to EN 60947-5-2
Continuous current I_a	≤ 200 mA
No load current	≤ 10 mA
Short-circuit protection	✓
Reverse polarity protection	✓
Power-up pulse protection	✓
Shock and vibration resistance	30 g, 11 ms/10 Hz ... 55 Hz, 1 mm
Ambient operating temperature	–25 °C ... +75 °C
Ambient temperature, storage	–25 °C ... +75 °C
Housing material	Brass, nickel-plated
Sensing face material	Plastic, PA 66
Housing length	71 mm
Thread length	41 mm
Tightening torque, max.	≤ 70 Nm
UL File No.	NRKH.E181493

[1)] At I_a max.
[2)] Supply voltage U_B and constant ambient temperature Ta.
[3)] Of Sr.

Safety-related parameters

$MTTF_D$	1,735 years
DC_{avg}	0 %

Reduction factors

Note	The values are reference values which may vary
St37 steel (Fe)	1
Stainless steel (V2A, 304)	Approx. 0.77
Aluminum (Al)	Approx. 0.44
Copper (Cu)	Approx. 0.37
Brass (Br)	Approx. 0.46

Installation note

Remark	Associated graphic see "Installation"
A	80 mm
B	180 mm
C	30 mm
D	114 mm
E	35 mm

F	380 mm

Classifications

ECLASS 5.0	27270101
ECLASS 5.1.4	27270101
ECLASS 6.0	27270101
ECLASS 6.2	27270101
ECLASS 7.0	27270101
ECLASS 8.0	27270101
ECLASS 8.1	27270101
ECLASS 9.0	27270101
ECLASS 10.0	27270101
ECLASS 11.0	27270101
ECLASS 12.0	27274001
ETIM 5.0	EC002714
ETIM 6.0	EC002714
ETIM 7.0	EC002714
ETIM 8.0	EC002714
UNSPSC 16.0901	39122230

Installation note

Non-flush installation

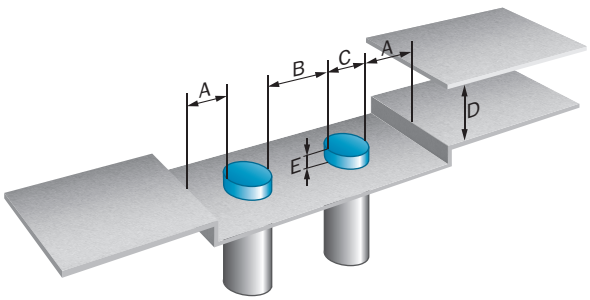

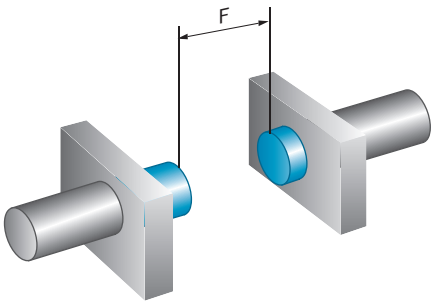

Connection type

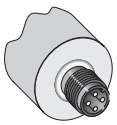

Connection diagram

Cd-007

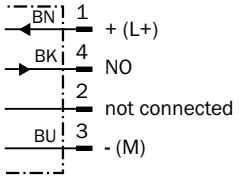

Dimensional drawing (Dimensions in mm (inch))

IME30 Standard, connector, non-flush

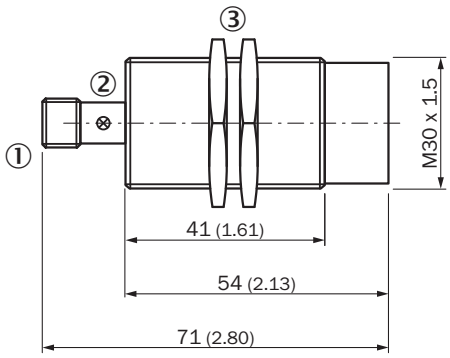

① Connection
② Display LED
③ Fastening nuts (2x); width across 36, metal

Recommended accessories

Other models and accessories ➜ www.sick.com/IME

	Brief description	Type	Part no.
Mounting brackets and plates			
	Mounting plate for M30 sensors, steel, zinc coated, without mounting hardware	BEF-WG-M30	5321871
	Mounting bracket for M30 sensors, steel, zinc coated, without mounting hardware	BEF-WN-M30	5308445

SICK AT A GLANCE

SICK is one of the leading manufacturers of intelligent sensors and sensor solutions for industrial applications. A unique range of products and services creates the perfect basis for controlling processes securely and efficiently, protecting individuals from accidents and preventing damage to the environment.

We have extensive experience in a wide range of industries and understand their processes and requirements. With intelligent sensors, we can deliver exactly what our customers need. In application centers in Europe, Asia and North America, system solutions are tested and optimized in accordance with customer specifications. All this makes us a reliable supplier and development partner.

Comprehensive services complete our offering: SICK LifeTime Services provide support throughout the machine life cycle and ensure safety and productivity.

For us, that is "Sensor Intelligence."

WORLDWIDE PRESENCE:

Contacts and other locations –www.sick.com

SICK
Sensor Intelligence.