Product data sheet

VTE180-2F32484

V180-2

CYLINDRICAL PHOTOELECTRIC SENSORS

SICK
Sensor Intelligence.

Illustration may differ

Ordering information

Type	Part no.
VTE180-2F32484	6044028

Other models and accessories ➜ www.sick.com/V180-2

Detailed technical data

Features

Functional principle	Photoelectric proximity sensor
Functional principle detail	Energetic
Dimensions (W x H x D)	18 mm x 18 mm x 83.8 mm
Housing design (light emission)	Cylindrical
Housing length	83.8 mm
Optical axis	Radial
Sensing range max.	1 mm ... 900 mm [1]
Sensing range	1 mm ... 650 mm [1]
Focus	Approx. 1.2°
Type of light	Visible red light
Light source	LED [2]
Light spot size (distance)	Ø 30 mm (800 mm)
Angle of dispersion	Approx. 1.2°
Wave length	645 nm
Adjustment	Potentiometer, 270° (Sensing range)

[1] Object with 90% remission (based on standard white, DIN 5033).
[2] Average service life: 100,000 h at T_U = +25 °C.

Mechanics/electronics

Supply voltage	10 V DC ... 30 V DC [1]
Ripple	± 10 % [2]

[1] Limit values when operated in short-circuit protected network: max. 8 A.
[2] May not exceed or fall below U_V tolerances.
[3] Without load.
[4] Signal transit time with resistive load.
[5] With light/dark ratio 1:1.
[6] A = V_S connections reverse-polarity protected.
[7] B = inputs and output reverse-polarity protected.
[8] D = outputs overcurrent and short-circuit protected.

Current consumption	30 mA [3]
Switching output	PNP
Switching mode	Light switching
Signal voltage PNP HIGH/LOW	Approx. V_S – 1.8 V / 0 V
Output current $I_{max.}$	≤ 100 mA
Response time	≤ 0.5 ms [4]
Switching frequency	1,000 Hz [5]
Connection type	Connector M12, 3-pin
Circuit protection	A [6] B [7] D [8]
Protection class	III
Weight	47 g
Housing material	Metal, Nickel-plated brass and PC
Optics material	Plastic, PMMA
Enclosure rating	IP67
Ambient operating temperature	–25 °C ... +55 °C
Ambient temperature, storage	–40 °C ... +70 °C

[1] Limit values when operated in short-circuit protected network: max. 8 A.
[2] May not exceed or fall below U_V tolerances.
[3] Without load.
[4] Signal transit time with resistive load.
[5] With light/dark ratio 1:1.
[6] A = V_S connections reverse-polarity protected.
[7] B = inputs and output reverse-polarity protected.
[8] D = outputs overcurrent and short-circuit protected.

Safety-related parameters

$MTTF_D$	1,884 years
DC_{avg}	0 %

Classifications

eCl@ss 5.0	27270903
eCl@ss 5.1.4	27270903
eCl@ss 6.0	27270903
eCl@ss 6.2	27270903
eCl@ss 7.0	27270903
eCl@ss 8.0	27270903
eCl@ss 8.1	27270903
eCl@ss 9.0	27270903
eCl@ss 10.0	27270904
eCl@ss 11.0	27270904
eCl@ss 12.0	27270903
ETIM 5.0	EC001821

ETIM 6.0	EC001821
ETIM 7.0	EC002719
ETIM 8.0	EC002719
UNSPSC 16.0901	39121528

Connection type

Connection diagram

Cd-066

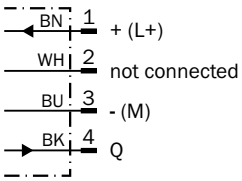

Characteristic curve

VTE180-2, 900 mm, radial

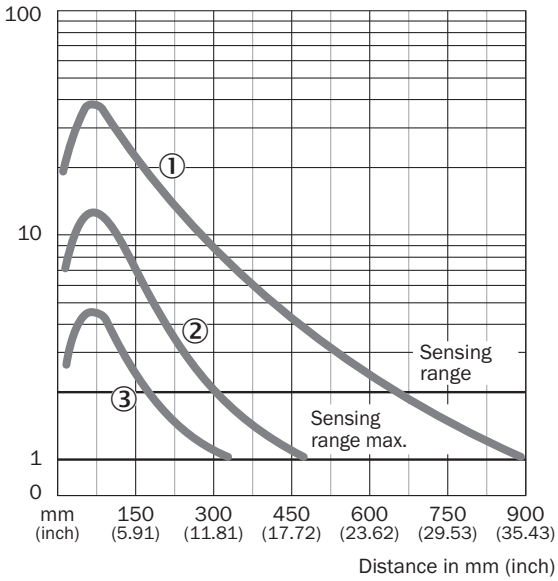

① Sensing range on white, 90% remission
② Sensing range on gray, 18 % remission
③ Sensing range on black, 6% remission

Light spot size

VTE180-2, 900 mm, 1.100 mm

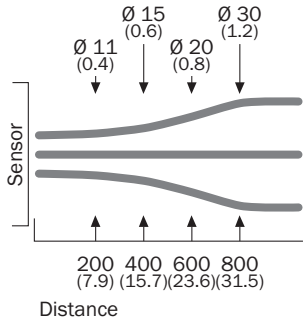

Sensing range diagram

VTE180-2, 900 mm, radial

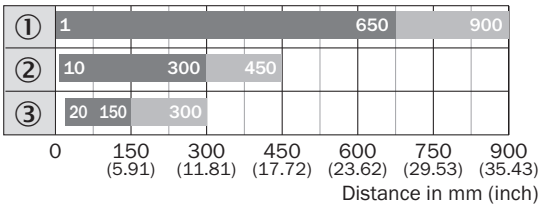

Sensing range Sensing range max.

① Sensing range on white, 90% remission
② Sensing range on gray, 18 % remission
③ Sensing range on black, 6% remission

Adjustments

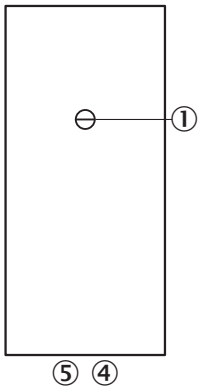

③ Sensitivity control 270°
④ LED indicator orange: switching output active
⑤ LED indicator green

Dimensional drawing (Dimensions in mm (inch))

VTF180-2, VTE180-2, metal, radial

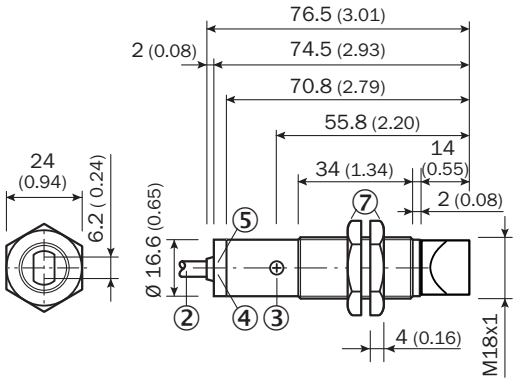

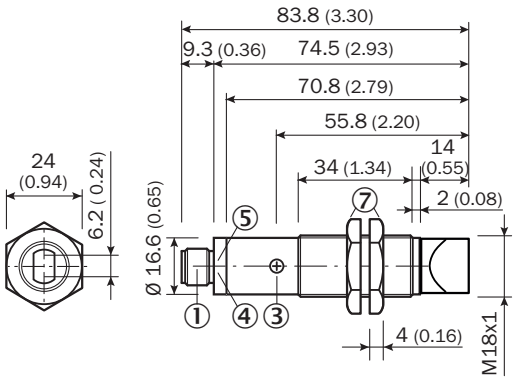

① Connector M12, 3-pin / Connector M12, 3-pin
② Connection cable 2 m
③ Sensitivity control: potentiometer 270°
④ LED indicator orange: switching output active
⑤ LED indicator green, stability indicator: LED lights continuously = light reception < 0.9/> 1.1; LED off = light reception > 0.9 / < 1.1
⑦ Metal housing, fastening nuts (2 x); width across 24

SICK AT A GLANCE

SICK is one of the leading manufacturers of intelligent sensors and sensor solutions for industrial applications. A unique range of products and services creates the perfect basis for controlling processes securely and efficiently, protecting individuals from accidents and preventing damage to the environment.

We have extensive experience in a wide range of industries and understand their processes and requirements. With intelligent sensors, we can deliver exactly what our customers need. In application centers in Europe, Asia and North America, system solutions are tested and optimized in accordance with customer specifications. All this makes us a reliable supplier and development partner.

Comprehensive services complete our offering: SICK LifeTime Services provide support throughout the machine life cycle and ensure safety and productivity.

For us, that is "Sensor Intelligence."

WORLDWIDE PRESENCE:

Contacts and other locations –www.sick.com

SICK
Sensor Intelligence.