Product data sheet

M40Z-025023RB0

M4000 Advanced A/P

SAFETY MULTIBEAM SENSORS

SICK
Sensor Intelligence.

Illustration may differ

Ordering information

Scanning range	Number of beams	Beam separation	System part	Type	Part no.
0.5 m ... 7.5 m	2	500 mm	Active unit	M40Z-025023RB0	1200126

Other models and accessories → www.sick.com/M4000_Advanced_A_P

Detailed technical data

Features

Scanning range	0.5 m ... 7.5 m
Number of beams	2
Beam separation	500 mm
Response time	10 ms
Synchronization	Optical synchronisation
End cap with integrated LED	✓

Safety-related parameters

Type	Type 4 (IEC 61496-1)
Safety integrity level	SIL 3 (IEC 61508)
Category	Category 4 (EN ISO 13849)
Performance level	PL e (EN ISO 13849)
PFH_D (mean probability of a dangerous failure per hour)	6.6×10^{-9} (EN ISO 13849)
T_M (mission time)	20 years (EN ISO 13849)
Safe state in the event of a fault	At least one OSSD is in the OFF state.

Functions

	Functions	Delivery status
Beam coding	✓	Uncoded
Restart interlock	✓	Internal
External device monitoring (EDM)	✓	Activated
Configurable application diagnostic output	✓	Contamination (OWS)
Safe SICK device communication via EFI	✓	
Differentiation between man and material (muting)	✓	
Type of human-material differentiation	Flexible, configurable 4-signal muting	

Interfaces

System connection	Hirschmann male connector M26, 12-pin
Permitted cable length	50 m [1]
Permitted cross-section	≥ 0.75 mm²
Configuration connection	Female connector M8, 4-pin
Configuration method	PC with CDS (Configuration and Diagnostic Software)
Display elements	LEDs 7-segment display
End cap with integrated LED	✓

[1] Depending on load, power supply and wire cross-section. The technical specifications must be observed.

Electrical data

Protection class	III (IEC 61140)
Supply voltage V_S	24 V DC (19.2 V DC ... 28.8 V DC) [1]
Residual ripple	≤ 10 % [2]
Power consumption	≤ 0.6 A [3]
Output signal switching devices (OSSDs)	2 PNP semiconductors, short-circuit protected, cross-circuit monitored [4]
ON state, switching voltage HIGH	24 V DC (V_S – 2.25 V DC ... V_S)
OFF state, switching voltage LOW	≤ 2 V DC
Current-carrying capacity per OSSD	≤ 500 mA

[1] The external voltage supply must be capable of buffering brief mains voltage failures of 20 ms as specified in EN 60204-1. Suitable power supplies are available as accessories from SICK.
[2] Within the limits of V_S.
[3] Without load.
[4] Applies to the voltage range between –30 V and +30 V.

Mechanical data

Dimensions	See dimensional drawing
Housing cross-section	52 mm x 55.5 mm
Material	
Housing	Aluminum alloy ALMGSI 0.5, powder coated
Front screen	Polycarbonate, scratch-resistant coating

Ambient data

Enclosure rating	IP65 (EN 60529)
Ambient operating temperature	–30 °C ... +55 °C
Storage temperature	–30 °C ... +70 °C
Air humidity	15 % ... 95 %, Non-condensing
Shock resistance	10 g, 16 ms (IEC 60068-2-29)

Other information

Wave length	850 nm

Classifications

ECLASS 5.0	27272703
ECLASS 5.1.4	27272703

ECLASS 6.0	27272703
ECLASS 6.2	27272703
ECLASS 7.0	27272703
ECLASS 8.0	27272703
ECLASS 8.1	27272703
ECLASS 9.0	27272703
ECLASS 10.0	27272703
ECLASS 11.0	27272703
ECLASS 12.0	27272703
ETIM 5.0	EC001832
ETIM 6.0	EC001832
ETIM 7.0	EC001832
ETIM 8.0	EC001832
UNSPSC 16.0901	46171620

Dimensional drawing (Dimensions in mm (inch))

Active unit

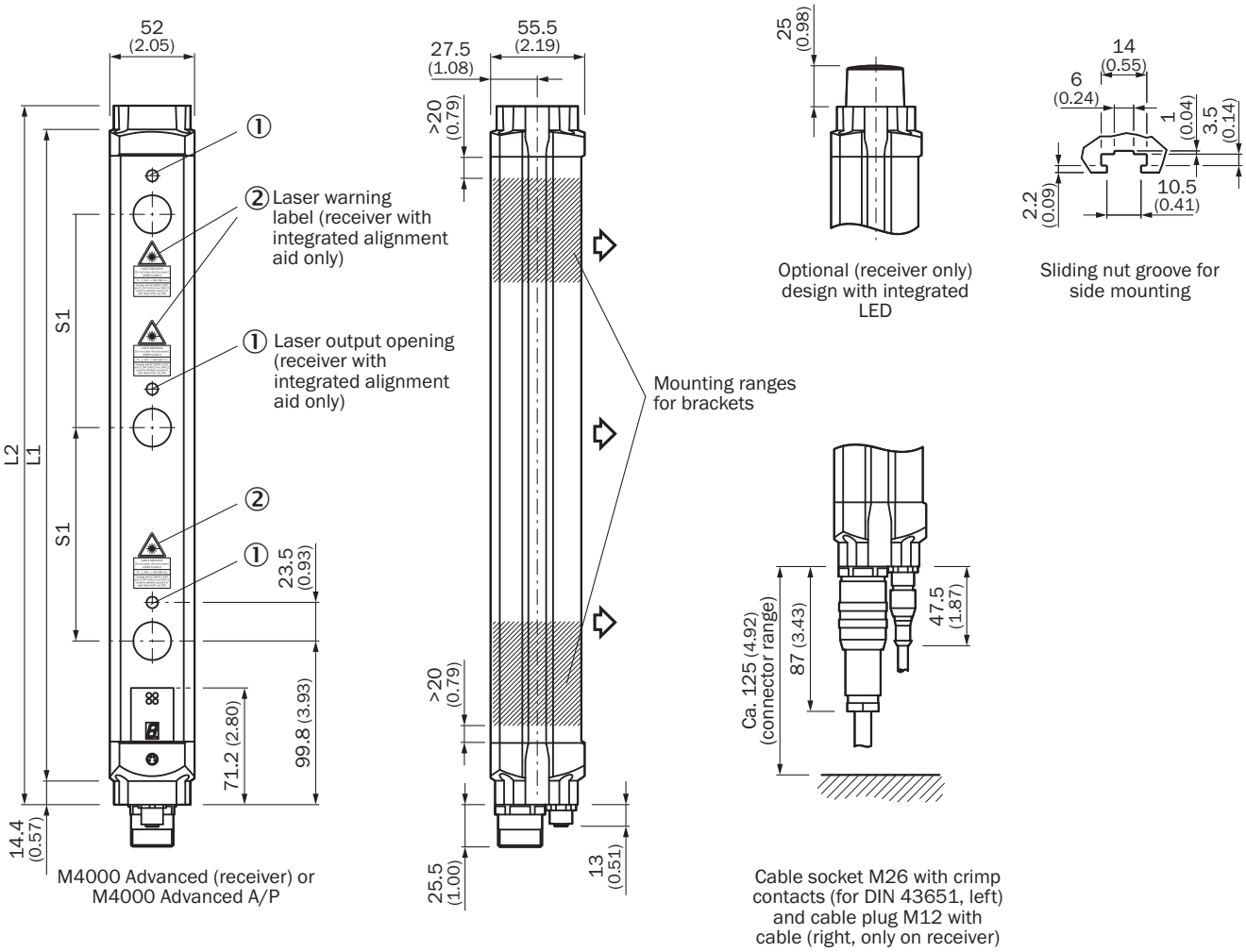

Sender/receiver in one housing

		L1	L2
2	500	643	672
4	300	1,043	1,072

Recommended accessories

Other models and accessories → www.sick.com/M4000_Advanced_A_P

	Brief description	Type	Part no.
Alignment aids			
	Laser alignment aid for various sensors, laser class 2 (IEC 60825). Do not look into the beam!, 19 mm x 67.3 mm x 66.9 mm	AR60	1015741

	Brief description	Type	Part no.
	Adapter AR60 for M4000 and M4000 Curtain	AR60 adapter, M4000	4040006
Muting accessories			
	Parallel muting (2 sensors), muting sensor brackets for mounting on M4000 housing profile or device columns with external mounting grooves	Muting arm kit M4000, 2 sensors, parallel muting	2060157
Mounting brackets and plates			
	4 pieces, Mounting kit 1, mounting bracket, rigid, L-shaped, including fixing screws and washers	BEF-3WNGBAST4	7021352
Plug connectors and cables			
	• **Connection type head A:** Female connector, M26, 12-pin, straight • **Description:** Unshielded • **Connection systems:** Crimp contacts • **Permitted cross-section:** 0.5 mm² ... 1.5 mm² • **Note:** 12 crimping contacts enclosed	DOS-0612G000GA3KM0	6020757
	• **Connection type head A:** Female connector, M26, 12-pin, angled • **Description:** Unshielded • **Connection systems:** Crimp contacts • **Permitted cross-section:** 0.5 mm² ... 1.5 mm² • **Note:** 12 crimping contacts enclosed	DOS-0612W000GA3KM0	6020758
Terminal and alignment brackets			
	4 pieces, Mounting kit 6, side bracket, rotatable, zinc diecast	BEF-1SHABAZN4	2019506
	4 pieces, Omega bracket, rotatable, fixable with only one screw, for mounting on the swivel mount, including spacer discs	BEF-2SMGEAAL4	2044846
	4 pieces, Mounting kit 12, rotatable, swivel mount	BEF-2SMGEAKU4	2030510
Others			
	• **Connection type head A:** Female connector, M26, 12-pin, straight • **Connection type head B:** Flying leads • **Signal type:** Sensor/actuator cable • **Cable:** 5 m, 12-wire, PVC • **Description:** Sensor/actuator cable, unshielded • **Connection systems:** Flying leads	DOL-0612G05M075KM0	2022545
Switching amplifiers			
	• **Applications:** Muting switching amplifier • **Compatible sensor types:** M4000 Advanced multiple light beam safety devices	UE403-A0930	1026287

SICK AT A GLANCE

SICK is one of the leading manufacturers of intelligent sensors and sensor solutions for industrial applications. A unique range of products and services creates the perfect basis for controlling processes securely and efficiently, protecting individuals from accidents and preventing damage to the environment.

We have extensive experience in a wide range of industries and understand their processes and requirements. With intelligent sensors, we can deliver exactly what our customers need. In application centers in Europe, Asia and North America, system solutions are tested and optimized in accordance with customer specifications. All this makes us a reliable supplier and development partner.

Comprehensive services complete our offering: SICK LifeTime Services provide support throughout the machine life cycle and ensure safety and productivity.

For us, that is "Sensor Intelligence."

WORLDWIDE PRESENCE:

Contacts and other locations –www.sick.com

SICK
Sensor Intelligence.